Lokmanya Tilak Jankalyan Shikshan Sanstha's
PRIYADARSHINI COLLEGE OF ENGINEERING
(Recognised by A.I.C.T.E., New Delhi & Govt. of Maharashtra, Affiliated to R.T.M.Nagpur University)
Near CRPF Campus, Hingna Road, Nagpur-440 019, Maharashtra (India)
Phone : 07104 – 236381, 237307, Fax : 07104 – 237681,
email : principal.pce.ngp@gmail.com, www.pcenagpur.edu.in

1.3.2 Average percentage of courses that include experiential learning through project work/field work/internship during last five years

ELECTRONICS ENGINEERING

SESSION (2017-2018)

Lokmanya Tilak Jankalyan Shikshan Sanstha's
PRIYADARSHINI COLLEGE OF ENGINEERING
(Recognised by A.I.C.T.E., New Delhi & Govt. of Maharashtra, Affiliated to R.T.M.Nagpur University)
Near CRPF Campus, Hingna Road, Nagpur-440 019, Maharashtra (India)
Phone : 07104 – 236381, 237307, Fax : 07104 – 237681,
email : principal.pce.ngp@gmail.com, www.pcenagpur.edu.in

1.3.2 Average percentage of courses that include experiential learning through project work/field work/internship during last five years

B.E – ELECTRONICS ENGINEERING SESSION(2017-2018)

Sr. No	Name of the course that include experiential learning through Project work/ Internship	Subject Code	Domain	Page No
1	Electronic Devices and Circuits	BEENE302T/P	Analog & Digital Circuits	1-19
2	Analog Circuits & Design	BEENE503T/P		
3	Electronics Workshop Practice	BEENE606P		
4	Electromagnetic Fields	BEENE403T		
5	Digital Circuits and Fundamental of Microprocessor	BEENE404T/P		
6	Microprocessor & Microcontroller	BEENE502T/P		
7	Electronics Measurement and Instrumentation	BEENE303T/P		
8	Network Analysis and Synthesis	BEENE305T	Signal Processing	20-35
9	Control System Engineering	BEENE603T		
10	Signals & Systems	BEENE405T		
11	DSP Processor & Architecture	BEENE701T/P		
12	Digital Signal Processing	BEENE602T/P		
13	Advanced Digital System Design	BEENE704T/P	VLSI/Embedded System	36-46
14	Embedded System	BEENE702T/P		
15	Microelectromechanical System and System On Chip	BEENE801T		
16	CMOS VLSI Design	BEENE803T/P		
17	Communication Electronics	BEENE504T	Communication	47-69
18	Microwave Engineering	BEENE601T/P		
19	Digital Communication	BEENE604T/P		
20	Optical Communication	BEENE703T		
21	Computer Communication Network	BEENE802T/P		
22	Elective -1 Mobile Communication	BEENE705T		
23	Elective-2 Wireless Sensor Network	BEENE804T		
24	Elective-3 Data Compression & Encryption	BEENE805T		
25	Object Oriented Programming & Data Structure	BEENE304T/P	Others	70-83
26	Power Devices & Machines	BEENE402T/P		
27	Environmental Studies	BEENE406T		
28	Industrial Economics & Entrepreneurship Development	BEENE505T		
29	Industrial Visit	BEENE607P		

Principal
Priyadarshini College of Engg.
Nagpur.

ANALOG & DIGITAL CIRCUITS DOMAIN

B. E. Third Semester

(Electronics / Electronics & Communication / Electronics & Telecommunication Engg)

ELECTRONIC DEVICES AND CIRCUITS

Duration : 3 Hr.
College Assessment : 20 Marks
University Assessment : 80 Marks

Subject Code : BEENE302T / BEECE302T/ BEETE302T [4 – 0 – 1 – 5]

Objectives :

(1) To present a clear consistent picture of the internal physical behavior of many electronic devices so that their studies of electronic circuits and system will be meaningful.

(2) To develop the basic tools with which they can later learn about newly developed devices and applications.

Outcome :

1. This subject will give an overview of various semiconductor devices.

2. At the end of this course, the students will be able to analyze and design amplifier circuits, oscillators and filter circuits employing BJT, FET devices.

Unit I : Diodes and it's applications **(08)**

PN junction diode, Volt-amp characteristics, Temperature dependence, Transition and Diffusion capacitance of PN junction , Zener and Avalanche Breakdown, **Diode Rectifiers**: Half wave, Full wave and Bridge rectifiers, Types of Filters, Ripple factor , Voltage Doublers.

Unit II : BJT Biasing:
(10)

Introduction, Transistor, construction, transistor operations, BJT characteristics, load line, operating point, Necessity of BJT biasing, Transistor biasing methods, Stability factor, Thermal stabilization, Thermal runaway and Compensation circuits, Transistor as an Amplifier

Unit III : Transistor Small Signal Analysis & Negative feedback amplifier
((12)

h-parameter model, Analysis of Transistor Amplifier circuits using h-parameters, CB,CE and CC Amplifier configurations and performance factors.

Principle of Negative feedback in electronic circuits, Voltage series, Voltage shunt, Current series, Current shunt types of Negative feedback, Typical transistor circuits effects of Negative feedback on Input and Output impedance, Voltage and Current gains, Bandwidth, Noise and Distortion.

Unit IV :

(10)

Principle of Positive feedback, Concept of Stability in electronics circuits, Barkhausen criteria for oscillation, Principle of operation of RC Phase Shift, Wien Bridge, Colpitt's, Hartley, Crystal oscillators.

Principle of operation of Transistorized Astable, Bistable and Monostable multivibrator.

Unit V : Power Amplifiers:

(10)

Power dissipations in transistors, Harmonic distortion, Amplifiers Classification,(Class-A, Class-B, Class-C, Class-AB) Efficiency, Push-pull and complementary Push-pull amplifiers, Cross-over distortion.

Unit VI : Field Effect Transistor and MOSFET:

(10)

JFET and its characteristics, Pinch off voltage, Drain saturation current, JFET amplifiers, CS,CD,CG amplifiers ,their analysis using small signal JFET model ,Biasing the FET, The FET as VVR Overview of D-MOSFET, E-MOSFET, n MOSFET, pMOSFET .

Text Books

1. J. Millman and Halkias : "Electronic devices and circuits" , TMH Publications
2. Boylestad & Nashelsky : "Electronic Devices & Circuit Theory" , PHI publications.
3. Salivahanan, Suresh Kumar, Vallavaraj:"Electronic devices and circuits" , TMH Publications.

Reference Book

1. J. Millman and Halkias: "Integrated Electronics, Analog & Digital Circuits & Systems" TM– 2000.
2. Sedra & Smith: "Micro Electronic Circuits" Oxford University Press, 2000
3. Albert Malvino : " Electronics Principles", TMH Publications.
4. Floyd : "Electronic Devices", Pearson Publications.
5. Schilling & Beloove : " Electronics Circuits Discrete and Integrated", Mc.Graw Hill Publications.

B. E. Fifth Semester

(Electronics /Electronics & Communication/ Electronics & Telecommunication Engg)

ANALOG CIRCUIT AND DESIGN

Duration: 3 Hrs.
College Assessment: 20 Marks
University Assessment: 80 Marks

Subject Code: BEENE503T/ BEECE503T/BEETE503T **[4 – 0 – 1 – 5]**

Objectives:

The course objectives are:

1. To study the basic characteristic, construction, open loop & close loop operations of Op-Amp.
2. To study linear and non linear applications of Op-Amp.
3. To study the design of Electronic Circuits for Oscillator, Multivibrator and Active Filters
4. To enable students to design regulated power supply using regulated ICs

Outcome:

After completing this course students shall be able to:

1. Describe basic differential Amplifier using transistor and its operation & characteristic.
2. Design linear Op-Amp circuits such as Voltage follower, Summing amplifier, scaling and averaging amplifier, Instrumentation amplifier circuits for various practical applications.
3. Design non-linear Op-Amp such as Comparators, Comparator IC such as LM 339, Schmitt trigger, multivibrator circuits for various practical applications using IC555.
4. Analyze and design amplifier circuits, oscillators, Filter, regulated power supply

Unit I: OP-Amp Fundamentals:
(8)

Block diagram of OP-Amp (Basic Building Blocks), Basic differential Amplifier using transistor and its operation, OP-Amp parameters, characteristic and Definition, Ideal OP-Amp, Equivalent circuit, Voltage Transfer curve, Inverting and Non-inverting configurations and design, concepts of virtual short and ground.

Unit II: OP-Amp Linear Applications:
(10)

Voltage follower, Summing amplifier, scaling and averaging amplifier, Instrumentation amplifier and applications, Integrator and differentiators (Practical considerations and design), Peak detector, Log and antilog amplifiers using OP-Amp & Transistor and analog multipliers.

Unit III: OP-Amp Non-Linear Applications:
(12)

Comparators, Schmitt trigger, Comparator IC such as LM 339, Clipper and Clamper, Precision Rectifier, PLL

Multivibrators: Bistable, Monostable, Astable multivibrator circuits using IC 555, Sample/Hold circuits, D/A (R/R) & A/D conversion circuits (Successive Approximation Method), design of ADC using 0804 ICs.

Unit IV: Design of Power supply system:
(09)

Unregulated D.C. power supply system with rectifiers and filters, Design of series voltage regulators, Design of regulators using IC 78×× and 79××, protection circuits for regulators, Design of SMPS (Buck & Boost)

Unit V: Design of sinusoidal oscillators & Function generator: (09)

OPAMP based Wein Bridge and Phase Shift oscillators, Transistorized Hartley, Colpitts oscillator, and Crystal oscillators, Evaluation of figure of merit for all above oscillator circuits. Design of function generators.

Unit VI: Design of Filters & Drivers:
(12)

Advantages of active filters, Design of Butterworth Active Filter, Design of Active filter of LPF, HPF, BPF of 1st order, 2nd and higher order (up to 6th order) Butterworth filter.

Design of Relay driver circuit, Design of stepper motor control circuit, Design of Dc servo motor control circuit

Books:

Text Books:

1. Operational Amplifier and Applications: R. Gayakwad.
2. Monograph on Electronic circuit Design: Goyal & Khetan.
3. Designing with Op-Amps: Franco (Mc Graw Hill).

Ref Books:

1. Linear Integrated Circuits Mannal I, II, and III: National Semiconductor.
2. Linear Applications Handbook National Semiconductors.
3. Regulated Power supply Handbook. Texas Instruments.

B. E. Sixth Semester

(Electronics / Electronics & Communication/ Electronics & Telecommunication Engg)

Electronics Workshop Practice

Duration: 2 Hrs.
College Assessment: 25Marks
University Assessment: 25 Marks

Subject Code: BEECE606P/ BEETE606P/ BEENE606P [0 – 2 – 0 – 2]

Objectives:

1. To make students familiar with measuring instruments like CRO, DSO and Signal Generator.
2. To make students familiar with Interfacing Peripheral with computer.
3. To understand PCB Designing process
4. To enable students to design & fabricate their own Hardware.

Outcome:

At the end of the course the students shall be able to:
1. Use DSO and Spectrum Analyzer.
2. Interface peripherals with computer.
3. Design PCB using PCB designing software.
4. Design & fabricate mini project.

Practical 1: Study of Functioning of Spectrum Analyzer and Digital Storage oscilloscope. (2 Hrs.)

Practical 2: Study of different Electronic components. (2 Hrs.)

Practical 3: Printed Circuit Boards (PCB): (4 Hrs.)

Types, Layout procedure, artwork, Fabrication (In this, fabrications of small circuit Using discrete component on single side PCB is expected).

Practical 4: Interfacing of displays (LCD, LED, 7 Segment) with PCs (2 Hrs.)

Practical 5: Hardware Mini Project (14 Hrs.)

- Hardware Mini project should consist of Circuit design, PCB fabrication, assembling & testing of small digital or analog **application circuit**.
- Mini Project work should be carried out by a group of maximum **three** students.
- Student should use standard software available for drawing circuit schematic, simulating the design and PCB (**single/double sided**) layout of circuit.

B. E. Fourth Semester

(Electronics / Electronics & Communication / Electronics & Telecommunication Engg)

ELECTROMAGNETIC FIELDS

Duration : 3 Hr.

College Assessment : 20 Marks

University Assessment : 80 Marks

Subject Code : BEENE403T/ BEECE403T/ BEETE403T **[4 – 0 – 1 – 5]**

Objectives : To provide the students of Engineering with a clear and logical presentation of basic concepts and principles of electromagnetic.

Outcomes :

After the completicn of this subjects, the students will

1. Understand the concepts of Electric, Magnetic and Electromagnetic fields required to understand the concepts of Electronic Communication.
2. Understand the different coordinate system for mathematical analysis of Electromagnetic Engineering.
3. Understand the different theorems and their use in Electromagnetic field.
4. Understand the use of waveguides for the transmission of electromagnetic waves at higher frequencies.
5. Understand the basic concepts of Radiation and Elements used for radiation along with the basic terminologies.

UNIT I : ELECTROSTATICS **(12)**

Introduction to Cartesian, Cylindrical and Spherical coordinate systems, Electric field intensity, flux density, Gauss's law, Divergence, Divergence Theorem, Electric potential and

potential gradient.

UNIT II: MAGNETOSTATICS: (10)

Current density and continuity equation, Biot-Savert's law, Ampere's circuital law and applications, Magnetic flux and Flux density, Scalar and Vector magnetic potentials.

UNIT III: MAXWELL S EQUATIONS AND BOUNDARY CONDITIONS: (08)

Maxwell's equations for steady fields. Maxwell's equations for time varying fields. Electric and magnetic boundary conditions.

UNIT IV :ELECTROMAGNETIC WAVES (10)

Electromagnetic wave equation, wave propagation in free space, in a perfect dielectric, and perfect conductor, skin effect, Poynting vector and Poynting theorem, reflection and refraction of uniform plane wave at normal incidence plane, reflection at oblique incident angle

UNIT V: WAVEGUIDES (10)

Introduction, wave equation in Cartesian coordinates, Rectangular waveguide, TE, TM, TEM waves in rectangular guides, wave impedance, losses in wave guide, introduction to circular waveguide.

UNIT VI: RADIATION (10)

Retarded potential, Electric and magnetic fields due to oscillating dipole (alternating current element), power radiated and radiation resistance, application to short monopole and dipole. Antenna Efficiency, Beam-width, Radiation Intensity, Directive Gain Power Gain & Front To Back Ratio. Advance topics on the subject

TEXT BOOKS:

1. W.H Hayt. and J.A. Buck : " Engineering Electromagnetics", McGraw Hill Publications.

2. Antenna & wave propogation, by K. D. Prasad, PHI Publication.

3. E.C. Jordan and K.C.Balamin ; "Electromagnetic Waves and Radiating System", PHI Publications.

REFERENCE BOOKS:

1. Rao : "Elements of Engineering Electromagnetics", Pearson education

2. E J.D Krauss : "Electromagnetics" , Mc-Graw Hill Publications.

B. E. Fourth Semester

(Electronics / Electronics & Communication / Electronics & Telecommunication Engg)

DIGITAL CIRCUITS AND FUNDAMENTAL OF MICROPROCESSOR

Duration : 3 Hr.

College Assessment : 20 Marks

University Assessment : 80 Marks

Subject Code : BEENE404T / BEECE404T/ BEETE404T [4 – 0 – 1 – 5]

Objectives : To acquaint students with various basic digital gates used in digital system and develop logical circuits using Boolean gates, construction of various logic circuits using basic gates.

Outcomes : At the end of the course the student will be able to analyze, design, and evaluate digital circuits of medium complexity, that are based on SSIs, MSIs, and programmable logic devices.

Unit I: Combinational Circuits (08)

Standard representations for logic functions, k map representation of logic functions (SOP & POS forms), minimization of logical functions for min-terms and max-terms (upto 4 variables), don't care conditions, Design Examples: Arithmetic Circuits, BCD - to – 7 segment decoder, Code converters.

Unit II :Logic Circuit Design (12)

Adders and their use as substractor, look ahead carry, ALU, Digital Comparator, Parity generators/checkers, Static and dynamic hazards for combinational logic.

Multiplexers and their use in combinational logic designs, multiplexer trees, Demultiplexers, Encoders & Decoders.

Unit III: Sequential Logic Design (10)

1 Bit Memory Cell, Clocked SR, JK, MS J-K flip flop ,D and T flip-flops. Use of preset and clear terminals, Excitation Table for flip flops. Conversion of flip flops.

Unit IV : Application of Flip flops: (10)

Registers, Shift registers, Counters (ring counters, twisted ring counters),Sequence Generators, ripple counters, up/down counters, synchronous counters, lock out, Clock

Skew

Unit V: Digital Logic Families (08)

Classification of logic families , Characteristics of digital ICs-Speed of operation , power dissipation, figure of merit, fan in, fan out, Comparison table of Characteristics of TTL, CMOS, ECL, RTL, I^2L, DCTL.

Classification and characteristics of memories: RAM, ROM, EPROM, EEPROM, NVRAM, SRAM, DRAM, expanding memory size, Synchronous DRAM (SDRAM), Double Data Rate SDRAM, Synchronous SRAM, DDR and QDR SRAM, Content Addressable Memory

Programmable logic devices: Detail architecture, Study of PROM, PAL, PLA, Designing combinational circuits using PLDs.

Unit VI: Fundamental of Microprocessor (12)

Introduction to microprocessor, Architecture of 8085 microprocessor, Addressing modes, 8085 instruction set, Concept of assembly language programming, Interrupts.

Text Books:

1. Morris Mano : " An approach to digital Design", Pearson Publications.
2. Ramesh Gaonkar : " Microprocessor Architecture, Programming and Applications with the 8085", Penram International Publications.
3. W. Fletcher : "Engg. Approach to Digital Design", PHI Publications.

Reference Books

1. Wakerly Pearon : "Digital Design: Principles and Practices", Pearon Education Publications.
2. Mark Bach : "Complete Digital Design", Tata MCGraw Hill Publications
3. R.P. Jain : "Modern digital electronics" , TMH Publications.

B. E. Fifth Semester

(Electronics / Electronics & Communication/ Electronics & Telecommunication Engg)

MICROPROCESSOR AND MICROCONTROLLERS

Duration: 3 Hrs.
College Assessment: 20 Marks
University Assessment: 80 Marks

Subject Code: BEENE502T/ BEECE502T/ BEETE502T [4 – 0 – 1 – 5]

Objectives:

The course objectives are:

1. To study fundamentals of microprocessor and microcontroller systems.
2. To study architecture of microprocessor & to understand the concept of memory organization, stack memory, Assembly language programming.
3. To study different interrupt techniques.
4. To study interfacing of microprocessor & microcontroller with different peripheral devices.

Outcome:

After completing this course students shall be able to:

1. Describe internal organization of 8086/8088 microprocessors & 8051microcontrollers.
2. Describe the concept of addressing modes and timing diagram of Microprocessor.
3. Interface 8086 & 8051 with Keyboard/ Display, ADC/DAC, Stepper motor etc.
4. Demonstrate the concept of interrupts and its use.
5. Demonstrate the concept of Serial & parallel data communication
6. Describe Handshaking concept and interfacing with peripheral devices.
7. Describe the concept of DMA & Pentium.
8. Describe 8087 Numeric coprocessor & its use in practical application.
9. Interface various Hardware with microprocessor.

Unit I: Intel 8086/8088 microprocessor & Programming: (09)

8086/8088 microprocessor, Pin diagram, Architecture, features and operating modes, Clock generator 8284, memory organization & interfacing, Addressing modes, complete instruction set.

Unit II: 8086 & Peripheral Interfacing I: (11)

Assembly language programming of 8086,Interrupt structure, I/O interfacing, Interfacing of peripherals like 8255 PPI, multiplexed 7-seg display & matrix keyboard interface using 8255. Programmable Keyboard/Display controller 8279, Organization, Working modes, command words & interfacing.

Unit III: 8086 & Peripheral Interfacing II: (10)

Programmable interval timer/counter 8254; Architecture, working modes, interfacing 8259 PIC, Organization, control words, interfacing, cascading of 8259's. Serial communication, Classification & transmission formats. USART 8251, Pins & block diagram, interfacing with 8086 & programming.

Unit – IV: Numeric Co-processor & DMA Controller: **(10)**

8086 maximum mode pin diagram, Closely coupled & loosely coupled multiprocessor system, 8087 Numeric coprocessor, architecture, interfacing with 8086, instruction set.DMAC 8237, Architecture, interfacing & programming, Introduction to Pentium.

Unit – V: 8051 microcontroller & programming: **(10)**

Introduction to 8051 microcontroller; Pin diagram, architecture, features & operation, Ports, memory organization, SFR's, Flags, Counters/Timers, Serial ports. Interfacing of external RAM & ROM with 8051.

8051 Interrupt structure, Interrupt vector table with priorities, enabling & disabling of interrupts

Unit – VI: 8051 microcontroller interfacing: **(10)**

Instruction set of 8051; data transfer, logical, arithmetic & branching instructions, Addressing modes, Assembly language programming examples, counter/timer programming in various modes. Serial communication, Operating modes, serial port control register, Baud rates. I/O expansion using 8255, Interfacing keyboard, LED display, ADC & DAC interface, stepper motor interface

Books:

Text Books:

1. Programming & Interfacing of 8086/8088, D.V. Hall, TMH.
2. Microprocessor 8086/8088 Family Programme Interfacing: Liu & Gibson
3. M.A. Mazidi & J.G. Mazidi, the 8051 Microcontroller and Embedded system, 3rd Indian reprint, Pearson Eduction
4. The Intel Microprocessor 8086 & 80486 Pentium and Pentium Pro. Architecture Programming and Interfacing – Brey.

Reference Books:

1. Intel Reference Manuals, Microprocessors & Microcontrollers: Intel
2. Microcontrollers – Peatman, Mc Graw Hill.
3. Microprocessors & Microcomputers based system design by Md. Rafiquzzaman.
4. 8086/8088 Microprocessors, Walter Triebel & Avtar Singh
5. Introduction to Microprocessors for Engineers and Scientists,P. K. Ghosh, P. R. Sridhar, PHI Publication.
6. The 8051 Microcontroller & Embeded Systems, Kenneth J. Ayala, Dhanvijay V. Gadre, CENGAGE Learning.

B. E. Third Semester

(Electronics / Electronics & Communication / Electronics & Telecommunication Engg)

ELECTRONICS MEASUREMENT AND INSTRUMENTATION

Duration : 3 Hr.

College Assessment : 20 Marks

University Assessment : 80 Marks

Subject Code : BEENE303T/ BEECE303T/ BEETE303T [4 – 0 – 0 – 4]

Objectives The primary aim of this subject is to acquaint the students with the basic principles of measuring instruments and show how each of them can be exploited for the measurement of large number of variables.

Outcome : At the end of this course, students will be able to:

1. Explain basic concepts and definitions in measurement.
2. Explain the operation and design of electronic instruments for parameter measurement and operation of different Transducers
3. Explain the operation of oscilloscopes and the basic circuit blocks in the design of an oscilloscope.
4. Explain the circuitry and design of various function generators.

Unit I : Fundamentals of Electronic Measurement and Instrumentation : (06)

Necessity of electronic Measurement , Block diagram of electronic measurement system, Types of Measurements, Function of instruments and measurement systems, Applications of measurement system, Elements of measurement system, Types of instruments, Theory of errors, Accuracy and Precision, Types of errors, Statistical analysis , probability of errors, Limiting errors, Standards of measurement.

Unit II : Electromechanical Instruments :
(08)

Construction of Galvanometer, Suspension Galvanometer, Torque and deflection Galvanometer, PMMC mechanism, DC voltmeter; AC voltmeters; Peak, average and true rms

voltmeters; Digital Multimeters; Ammeters, Ohm-meters and their design' AC indicating instruments, Watt-hour meter; Power factor meter.

Unit III : AC and DC Bridges : **(10)**

DC Bridges : Wheatstone Bridge, Kelvin Bridge

AC Bridges and their applications : Maxwell's Bridge, Hay's Bridge, Schering Bridge, Desauty's Bridge, Wein Bridge, Detectors for AC bridges.

Unit IV : Transducers : **(08)**

Static and dynamic characteristics, Classification of transducers, Capacitive transducer, Inductive transducer, Resistive transducer, RVDT, Strain Gauge, RTD, Optical Transducers, Hall effect transducer, Piezoelectric transducers, Transducers for measurement of Pressure, Temperature, Level, Displacement, Flow.

Unit V : Oscilloscope and Signal Generators : **(08)**

CRO : Types, Dual trace, High frequency, sampling and storage oscilloscopes, Applications of CRO.

Signal Generators : Introduction, Sine-wave generator, standard signal generators, Audio frequency signal generation, RF generator, Pulse generator, Function generator.

Unit VI : Signal Analyzer and Data Acquisition System: **(08)**

Construction and operation of Signal analyzer, Wave analyzer, Harmonic Distortion analyzer, Spectrum analyzer and Logic analyzer; Signal conditioning and its necessity, process adopted in signal conditioning, Functions of Signal conditioning, AC/DC Conditioning systems, Data conversion: ADC, DAC, Generalized data acquisition system: single channel and multi-channel DAS.

VOICE OPERATED WHEELCHAIR

A project report submitted

In

the partial fulfillment of requirement for the award of

Degree of

Bachelor of Engineering
in
Electronics Engineering

by

Mr. Nikhil Meshram **Mr. Shubham Khobragade**

Mr. Snehal Ganvir

Guide

Dr. S. S. Shriramwar

Department of Electronics engineering
Priyadarshini College of Engineering, Nagpur

(An Institute affiliated to Rashtrasant Tukadoji Maharaj Nagpur University, Nagpur)

2017-18

Department of Electronics Engineering,
Priyadarshini Engineering College of Engineering,
Nagpur

CERTIFICATE

This is to certify that this is a bonafide record of project work entitled **VOICE OPERATED WHEELCHAIR** carried out by

Name of Student	(Roll No)
Nikhil Meshram	120
Shubham Khobragade	119
Snehal Ganvir	124

Student of the B.E., Department of Electronics Engineering, during the academic year 2016-2017, in the partial fulfillment of the requirement for the award of the degree of Bachelor of Electronics Engineering offered by the Rashtrasant Tukadoji Maharaj Nagpur University, Nagpur.

Prof. Dr.S.S Shriramwar	**Prof. Dr.S.S Shriramwar**	**Dr.M.P Singh**
Project Guide	H.O.D ELECTRONICS	Principal

H.O.D. Electronics
Priyadarshini College of
Engg., Nagpur.

Date: 19/04/2018
Place: Nagpur

INTRODUCTION

1.1 Introduction

The main objective is to design a system which provides solution for the physically handicapped (challenged) people those who can't move by themselves, using speech commands by interfacing the Speech Recognition kit with microcontroller and wheel chair. The voice commands are given to the speech recognition kit with the help of mic and the wheel chair moves according to given directions. The movement of the wheelchair is controlled by the motors and motor drivers connected to the wheels of the chair. The interfacing between speech recognition kit and motors is done by microcontroller. Here in this project the microcontroller used is ATMEGA32 for receiver and ATMEGA162 for transmitter. This concept was taken in this paper to reduce the human efforts in driving.

A wheelchair fitted with obstacle sensor to achieve some independent mobility when any obstacle is there in front of wheelchair. The obstacle sensor will help the rider control the wheelchair by taking over some of the decision for steering and avoiding objects until user is able to handle the job. The voice command is a person dependent, the voice command we provide to the microcontroller is person dependent this is the major advantage of this speech recognition IC. The system comprises of transmitting section and receiving section. . Initially, the voice command is stored in the data base with the help of the function keys. Then the input voice commands are transmitted through wireless. The voice received is processed in the voice recognition system where the feature of the voice command is extracted and matched with the existing sample in the database. The module recognizes the voice and sends control messages to the microcontroller. The proposed Speech Recognition Based Wheelchair Operation allows physically disabled person to control the wheelchair easily without the need to use hands.

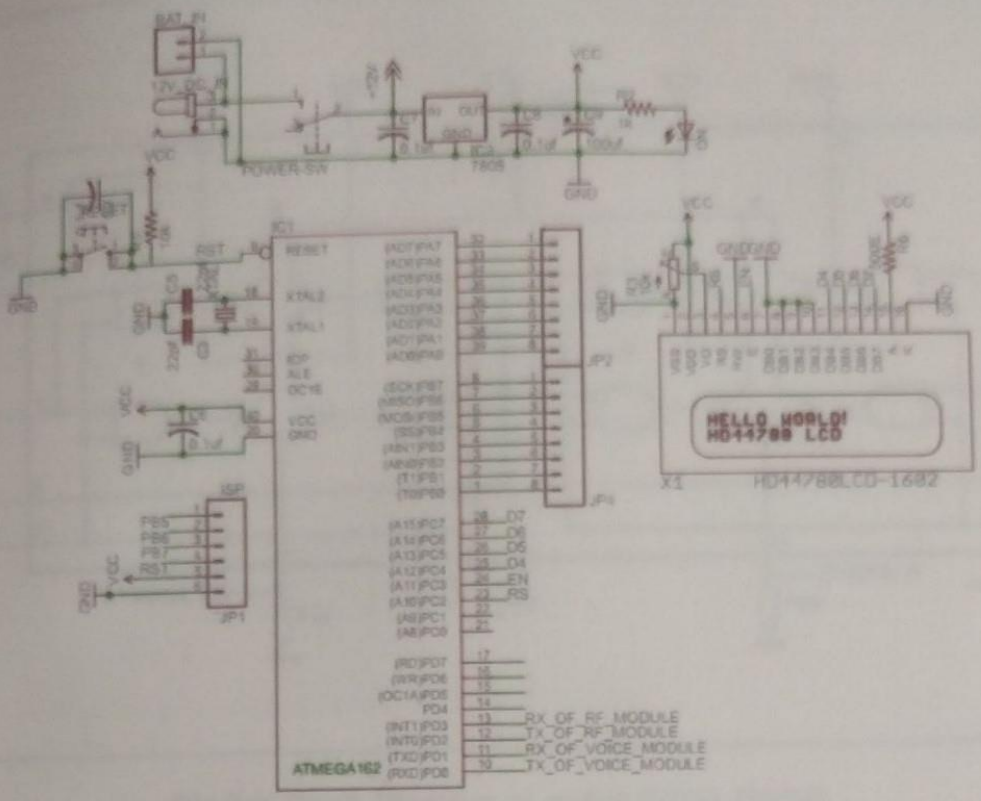

Fig 3.5: Interfacing of transmitter

3.4 Motor Driver Circuit:

The L298 is an integrated monolithic circuit in a 15-lead Multiwatt and PowerSO20 packages. It is a high voltage, high current dual full-bridge driver designed to accept standard TTL logic levels and drive inductive loads such as relays, solenoids, DC and stepping motors. Two enable inputs are provided to enable or disable the device independently of the input signals. The emitters of the lower transistors of each bridge are connected together and the corresponding external terminal can be used for the connection of an external sensing resistor. An additional supply input is provided so that the logic works at a lower voltage.

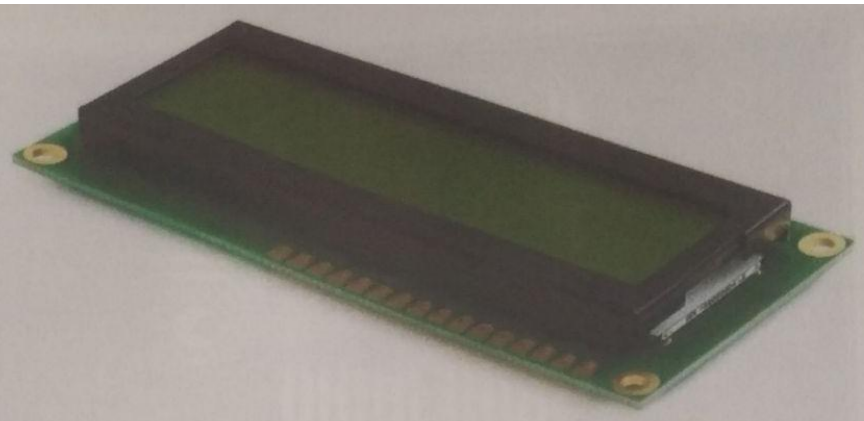

Fig 4.2: 16*2 LCD Display

The 16*2 LCD display is interfaced with microcontroller ATMEGA 162.It is ed to display the said command. When user speaks the command in the connected c the corresponding action will be performed by the motors and at the same time D display will display the said command.

2 PCB Layout:

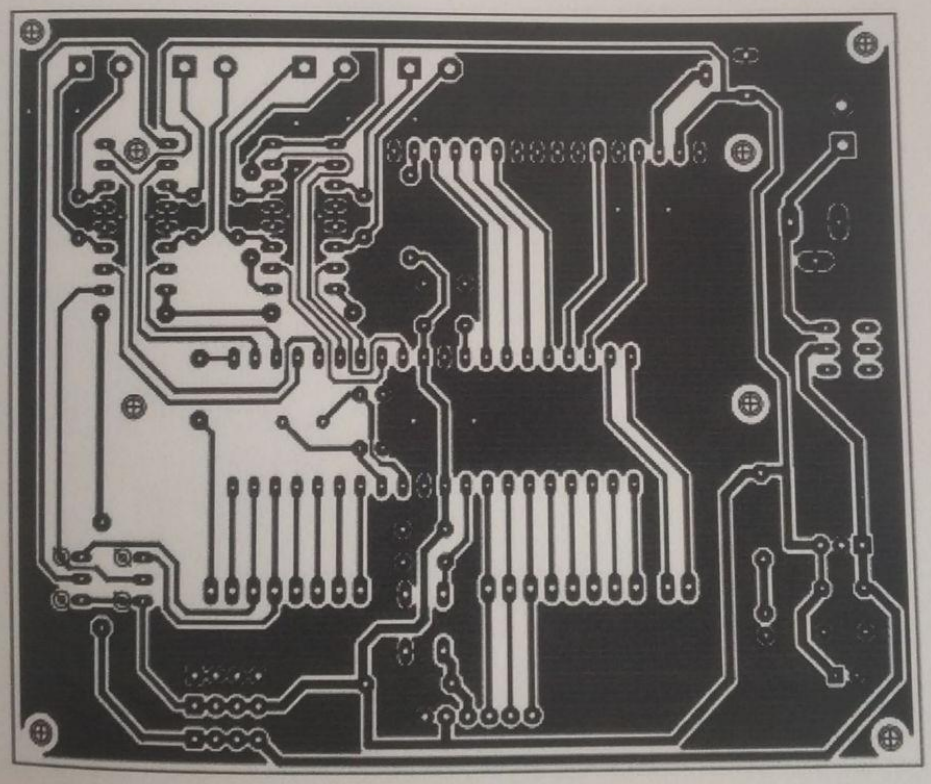

Fig 4.3: PCB Layout of Receiver

2-D fix could be hundreds of meters off. A modern GPS receiver will typically track all of the available satellites simultaneously, but only a selection of them will be used to calculate your position

3.4.4 RESISTOR

Fig.3.8 Resistor

The resistor is a passive electrical component to create resistance in the flow of electric current. In almost all electrical networks and electronic circuits they can be found. The resistance is measured in ohms. An ohm is the resistance that occurs when a current of one ampere passes through a resistor with a one volt drop across its terminals. The current is proportional to the voltage across the terminal ends. This ratio is represented by Ohm's law. Resistors are used for many purposes. A few examples include delimit electric current, voltage division, heat generation, matching and loading circuits, control gain, and fix time constants. They are commercially available with resistance values over a range of more than nine orders of magnitude. They can be used to as electric brakes to dissipate kinetic energy from trains, or be smaller than a square millimeter for electronics.

SIGNAL PROCESSING DOMAIN

B. E. Third Semester

(Electronics / Electronics & Communication/ Electronics & Telecommunication Engg.)

NETWORK ANALYSIS AND SYNTHESIS

Duration : 3 Hr.

College Assessment : 20 Marks

University Assessment : 80 Marks

Subject Code : BEENE305T/ BEECE305T / BEETE305T [4 – 0 – 1 – 5]

Objectives :

- To make the students capable of analyzing any given electrical network.
- To make the students learn how to synthesize an electrical network from a given impedance /admittance function.

Outcomes

- Students will be able to analyze the various electrical and electronic networks using the techniques they learn.
- Students will be able to construct a circuit to suit the need.

Unit I: Basic Circuit Analysis and Simplification Techniques (10)

Source transformation and source shifting, Nodal and mesh analysis, Mutual inductances, Basic equilibrium equations, Matrix approach for complicated networks, Super mesh and super mode analysis, Duality.

Unit II: Network Theorems (12)

Superposition, Thevenin's, Norton's and Maximum Power Transfer Theorems, Reciprocity Theorem , Compensation Theorem, Miliers Theorem and its dual, Tellegen's Theorem as applied to ac circuits.

Unit III: Frequency Selective Networks **(08)**

Significance of Quality factor. **Series Resonance**: Impedance, Phase angle variations with frequency, Voltage and current variation with frequency, Bandwidth, Selectivity. Effect of Rg on BW & Selectivity. Magnification factor.

Parallel resonance: Resonant frequency and admittance variation with frequency, Bandwidth and selectivity. General case: Resistance present in both branches. Comparison and applications of series and parallel resonant circuits.

Unit IV: Filters and Attenuators **(12)**

Filters & Attenuators: Filter fundamentals, pass and stop band, constant k prototype, LPF, HPF, BPF, Band stop filter, m-derived filters, composite filter design. Attenuators: Definition and Units of attenuation, Bartlett's bisection theorem, lattice attenuator, symmetrical T, π and bridged attenuator, asymmetrical L-section attenuator, Ladder attenuator

Types of Transmission lines, Transmission Line Equation, Equivalent circuits, Primary and Secondary line constants

Unit V: Laplace Transform and Its Applications **(08)**

Introduction to complex frequency, Definition of Laplace Transform, Basic Properties of Laplace Transform, Inverse Laplace Transform Techniques, Laplace Transform of Basic R, L and C components, Synthesis of Few typical waveforms & their Laplace Transform, Transient response of simple electrical circuits such as RL & RC to standard inputs and evaluation of initial and final conditions.

Unit VI: Two Port Network Parameters and Functions **(10)**

Terminal characteristics of network: Z, Y, h, ABCD Parameters; Reciprocity and Symmetry conditions, Applications of the parameters. Network functions for one port and two port networks, Pole-zeros of network functions and network stability,

Text Books :

B. E. Sixth Semester

(Electronics / Electronics & Communication/ Electronics & Telecommunication Engg)

CONTROL SYSTEM ENGINEERING

Duration: 3 Hrs.
College Assessment: 20 Marks
University Assessment: 80 Marks

Subject Code: BEENE603T/ BEECE603T/ BEETE603T **[4 – 0 – 1 – 5]**

Objectives:

The Course Objectives are:

1. To study the fundamental concepts of Control systems and mathematical modeling of the system. 2. To study the concept of time response and frequency response of the system.
3. To study controllers & compensators.
4. To study the basics of stability analysis of the system.

Outcome:

At the end of the course the students shall be able to:

1. Analyze various control systems.
2. Represent the mathematical model of a system.
3. Determine the response of different order systems for various step inputs.
4. Analyze the stability of the system using Root locus. Bode plot, Nyquist plot.
5. Obtain transfer function of systems using signal flow graph.
6. Apply the state variable approach in design.

Unit I: Introduction and Modeling of control system **(11)**

Introduction to need for automation and automatic control, use of feedback, Broad spectrum of system application. Mathematical modeling, Differential equations, transfer functions, block diagram, signal flow graphs, Effect of feedback on parameter variation, disturbance signal, servomechanisms. Control system components, Electrical, Electromechanical. Their functional analysis and input, output representation.

UNIT-II: Time Domain analysis **(09)**

Time response of the system, first order & second order system, (standard inputs) concept of gain & time constant, steady state error, type of control system, approximate method for higher order system. Principles of P,PI,PD,PID controllers.

UNIT-III: Stability & Root Locus method **(11)**

Stability: Stability of control systems, conditions of stability, characteristic equation, Routh Hurwitz criterion, special cases for determining relative stability.

Root Locus method: Root location and its effect on time response, elementary idea of Root Locus, effect of adding pole and zero and proximity of imaginary axis.

UNIT-IV: Frequency response analysis **(11)**

Frequency response method of analysing linear system, Nyquist & Bode Plot, stability & accuracy analysis from frequency response, open loop & closed loop frequency response.

Nyquist criteria, effect of variation of gain & addition of poles & zeros on response plot, stability margin in frequency response.

UNIT-V: Compensators **(08)**

Needs of compensations, lead compensations, Lag compensations, Lead-Lag compensations (theoretical concepts)

Overview of various transducers with their signal conditioning systems.

UNIT-VI: State variable approach **(10)**

State variable method of analysis, state choice of state representation of vector matrix differential equation, standard form, relation between transfer function and state variable.

Books:

Text Books:

1. Control Systems Engineering, I.J. Nagrath, M. Gopal
2. Modern Control system (II Edition) – Katsuhiko Ogata
3. Control systems by Smarajit Ghosh (second Edition, Pearson)

Reference Book:

1. Automatic Control system (II Edition) – Benjamin C, Kuo, PHI
2. Modern Control System, Drof, Bishop, Wesly Publication
3. Control system Engineering, S.K. Bhattacharya, Pearson Edu.

B. E. Fourth Semester

(Electronics / Electronics & Communication / Electronics & Telecommunication Engg)

SIGNALS AND SYSTEMS

Duration : 3 Hr.

College Assessment : 20 Marks

University Assessment : 80 Marks

Subject Code : BEENE405T/ BEECE405T/ BEETE405T [4 – 0 – 1 – 5]

Objectives :

The concept of this subject enable you to understand how signals, systems and inference combine in prototypical tasks of communication, control and signal processing.

Outcomes :

After completion of this subject, the students will

1. Get knowledge about different types of signals and systems used in communication Electronics.
2. Understand the concept of probability and its use in communication system.
3. Be able to embed the use of fourier series and fourier transform for feature extraction of different electronic signals.
4. Understand different coding schemes and able to apply selective coding scheme for the application needed.
5. Understand the different analog and digital modulation schemes

UNIT-I: SIGNAL ANALYSIS (12)

Analysis of Signals, Representation of signals using a set of orthogonal signals, Fourier series representation of periodic signals. Fourier transform of periodic and non-periodic signals, Properties of Fourier Transform, convolution in time & frequency domain. Sampling theory for band limited signals.

UNIT-II: PROBABILITY & RANDOM PROCESS (12)

Probability, random variables and stochastic processes. Review of probability theory, random variables, probability density and distribution function, Random processes, periodic processes,

stationary processes. Auto correlation, cross correlation, applications to signal analysis,. Power density and spectral density function.

UNIT-III: LINE CODING (08)

Bandwidth and rate of pulse transmission, Inter symbol Interference, PSD of Digital signals, Line coding, RZ, NRZ, Polar, Manchester coding Schemes. Nyquists's first & second Criterion for zero ISI, Pulse shaping, tapped delay line filters and adaptive equalization.

UNIT-IV: MODULATION TECHNIQUES (10)

Introduction of Amplitude Modulation and Frequency modulation in brief, Elementary theory of SSB, DSB and noise calculation, noise calculation in SSBSC, DSB with carrier, Square law Demodulation, Envelope Demodulator, Noise in FM reception, Effect of Transmitter noise, FM threshold Effect

Quantization noise, types of Quantization –Uniform and Non-Uniform, A-Law and μ Law, Pulse Code Modulation , Delta modulation, Adaptive Delta modulation,

UNIT-V: DIGITAL CARRIER SYSTEM (08)

Digital Carrier Systems: Matched filter detection of binary signals, decision, threshold, error probability, Salient features of ASK, FSK & PSK system DPSK systems including M-ary Communication Systems.

UNIT-VI: INFORMATION THEORY AND CODING (10)

Information theory, channel capacity of discrete & continuous channels, Error control coding Hamming distance, Linear block codes, CRC, Convolution Codes.

Text Books:

1. B.P.Lathi : " Modern Digital & Analog Communication Systems" :.
2. Simon Haykin, Barry Wan Veen : "Signals and Systems", John Wiley and Sons Publications.
3. Oppenheim, Wilsky, Nawab : "Signals and Systems", Person Education Publications
4. A.B. Carlson : " Communication systems",

Reference Books:

1. Communication Systems: B.P. Lathi.
2. R.P. Singh, S.D. Sapre : "Communication Systems: Analog and Digital", McGraw Hill Publications.
3. Nagrath I.J., Sharan S.N., Ranjan R., Kumar S. : "Signals and Systems", Tata McGraw Hill Publications.

B. E. Seventh Semester

(Electronics /Electronics & Communication/ Electronics & Telecommunication Engg)

DSP PROCESSOR & ARCHITECTURE

Duration: 3 Hrs.
College Assessment: 20 Marks
University Assessment: 80 Marks

Subject Code: BEECE701T/ BEETE701T/ BEENE701T [4 – 0 – 1 – 5]

Objectives:

1.To study Programmable DSP Processors.
2.To provide an understanding of the fundamentals of DSP techniques .
3.To study implementation & applications of DSP techniques.
4.To study multi-rate filters.
5.To understand architecture of DSP processor..

Outcome: By the end of the course, the students shall be able

1. to describe the detailed architecture, addressing mode, instruction sets of TMS320C5X
2. to write program of DSP processor.
3. to design & implement DSP algorithm using code composer studio
4. to design decimation filter and interpolation filter.

UNIT 1: FUNDAMENTALS OF PROGRAMMABLE DSPs (10)

Multiplier and Multiplier accumulator, Modified Bus Structures and Memory access in P-DSPs, Multiple access memory , Multi-ported memory , VLIW architecture, Pipelining , Special Addressing modes in P- DSPs , On chip Peripherals, Computational accuracy in DSP processor, Von Neumann and Harvard Architecture, MAC

UNIT 2: ARCHITECTURE OF TMS320C5X (08)

Architecture , Bus Structure & memory, CPU ,addressing modes , AL syntax.

UNIT 3: Programming TMS320C5X (10)

Assembly language Instructions , Simple ALP – Pipeline structure, Operation Block Diagram of DSP starter kit , Application Programs for processing real time signals.

UNIT 4: PROGRAMMABLE DIGITAL SIGNAL PROCESSORS: (12)

Data Addressing modes of TMS320C54XX DSPs, Data Addressing modes of S320C54XX Processors, Program Control, On-chip peripheral, Interrupts ofTMS320C54XX processors, Pipeline Operation of TMS320C54XX Processors , Block diagrams of internal Hardware, buses , internal memory organization.

UNIT 5: ADVANCED PROCESSORS (07)

Code Composer studio - Architecture of TMS320C6X - architecture of Motorola DSP563XX –

Comparison of the features of DSP family processors.

UNIT 6: IMPLEMENTATION OF BASIC DSP ALGORITHMS: **(08)**

Study of time complexity of DFT and FFT algorithm, Use of FFT for filtering long data sequence, Interpolation filter, Decimation filter, wavelet filter.

Text- Books:

1. B. Venkata Ramani and M. Bhaskar, Digital Signal Processors, Architecture, Programming and TMH, 2004.
2. Avtar Singh, S.Srinivasan DSP Implementation using DSP microprocessor with Examples from TMS32C54XX -Thamson 2004.
3. E.C.Ifeachor and B.W Jervis, Digital Signal Processing - A Practical approach, Pearson Publication
4. Salivahanan. Ganapriya, Digital signal processing, TMH , Second Edition

Reference Books:

1. DSP Processor Fundamentals, Architectures & Features – Lapsley et al. , S. Chand & Co, 2000.
2. Digital signal processing-Jonathen Stein John Wiley 2005.
3. S.K. Mitra, Digital Signal Processing, Tata McGraw-Hill Publication, 2001.
4. B. Venkataramani, M. Bhaskar, Digital Signal Processors, McGraw Hill

B. E. Sixth Semester

(Electronics / Electronics & Communication/ Electronics & Telecommunication Engg)

DIGITAL SIGNAL PROCESSING

Duration: 3 Hrs.
College Assessment: 20 Marks
University Assessment: 80 Marks

Subject Code: BEENE602T/ BEECE602T/ BEETE602T [4 – 0 – 1 – 5]

Objectives:

1. To study the basic concepts of digital signal processing.
2. To study analysis and processing of signals for different kind of applications and retrieval of information from signals.
3. To understand the physical significance of circular convolution and its relation with linear convolution.
4. To study designing of digital filters and its realization.
5. To study analysis of signals using the discrete Fourier transform (DFT) and Z-Transform.
6. To study behavior of discrete time systems using Z-Transform.

Outcome:

By the end of the course the students shall be able to:

1. Represent discrete-time signals analytically and visualize them in the time domain.
2. Meet the requirement of theoretical and practical aspects of DSP with regard to sampling and reconstruction.
3. Design and implement digital filter for various applications.
4. Describe various transforms for analysis of signals and systems.
5. Describe the concept of multi rate signal processing and how to apply it for the wavelet transform.

Unit I: Introduction: (08)

Basic elements of DSP and its requirement, Advantages of Digital over analog signal processing, sampling theorem, sampling process and reconstruction of sampling data.

Discrete time signals & systems: Discrete time signals & systems, classification of discrete time signals and systems, LTI systems, linear convolution, Cross Correlation, Autocorrelation.

Unit II: Z- Transforms: (08)

The Z-transform: Definition, properties of the region of convergence for the Z-transform, Z-transform properties, Inverse Z-transform, Parseval's theorem, unilateral Z-transform.

Unit III: Discrete and Fast Fourier Transforms (12)

Definition and properties of DFT, IDFT, Relation between DFT and Z–Transform, Radix- 2 FFT algorithms, Linear filtering methods based on DFT, circular convolution, Frequency analysis of discrete time signals using DFT, Gortzel algorithm.

Unit IV: IIR Filter Design & Realization **(12)**

Filter design methods – Approximation of derivatives, Impulse invariance, bilinear transformation, characteristics & designing of Butterworth, Chebyshev filters, frequency transformations, IIR filter structures-Direct form I-II, transpose form, parallel form, cascade, Lattice and Lattice-ladder structures.

Unit V: FIR Filter Design & Realization **(12)**

Symmetric and antisymmetric FIR filters, Linear phase FIR filter, design of FIR filters using windows (Rectangular, Bartlett, Hanning, Hamming & Blakman), frequency sampling method, FIR differentiators, FIR filter structures.

Unit VI: Multirate DSP **(08)**

Introduction, Decimation by factor D, Interpolation by factor I, Sampling rate conversion by rational factor I/D, Sub band coding of speech signals and its applications, introduction to wavelet & wavelet transform, Introduction to DSP architecture TMS 320.

Books:

Text Books:

1. J.G. Proakis, D.G. Manolakis "Digital Signal Processing: Principles, algorithms and applications, Pearson Education.
2. A.V. Oppenheim, R.W. Schafer, "Discrete Time Signal Processing", Pearson Education.
3. Rabiner Gold " Theory and Application of DSP", PHI
4. Texas Instruments and Analog Devices DSP Chip Manuals.

Reference books:

1. Digital signal processing- A practical approach Second Edition, 2002. .E. C. Ifeachar, B. W. Jarvis Pearson Education
2. Sanjit K. Mitra , 'Digital Signal Processing – A Computer based approach'
3. S. salivahanan, A Vallavaraj, C. Gnanapriya , 'Digital Signal Processing', 2nd Edition McGraw Hill.
4. A. Nagoor Kani, 'Digital Signal Processing', 2nd Edition McGraw Hill.
5. P. Ramesh Babu, 'Digital Signal Processing' Scitech

ARMOUR- A SAFETY DEVICE

A project report submitted

in

the partial fulfillment of requirement for the award of

degree of

Bachelor of Engineering

in

Electronics Engineering

by

Miss Aishwarya Bagde

Miss Akansha Karmarkar

Miss Anjali Shende

Miss Sheetal Jangale

Under the guidance of

Mrs.P.J.Suryawanshi

Department of Electronics Engineering

Priyadarshini College Of Engineering, Nagpur

(An institution affiliated to Rashtrasant Tukdoji Maharaj Nagpur University, Nagpur)

2017-2018

Department of Electronics Engineering,

Priyadarshini Engineering College of Engineering, Nagpur

CERTIFICATE

This is to certify that this is a bonafide record of project work entitled "**Armour-A safety device**" carried out by

Aishwarya Bagde

Akansha Karmarkar

Anjali Shende

Sheetal Jangale

Students of the B.E., Department of Mechanical Engineering, during the academic year 2017-2018, in the partial fulfillment of the requirement for the award of the degree of Bachelor of Engineering (Electronics Engineering) offered by the Rashtrasant Tukadoji Maharaj Nagpur University, Nagpur.

Date: 17/04/2018

Mrs. P.J.Surwanshi
Guide

Dr.S.S.Shriramwar
H.O.D Electronics Engineering

Dr.M.P.Singh
(Principal,P.C.E,Nagpur-44001)

Department of Electronics Engineering,

Priyadarshini Engineering College of Engineering, Nagpur

CERTIFICATE

This is to certify that this is a bonafide record of project work entitled "**Armour-A safety device**" carried out by

Aishwarya Bagde

Akansha Karmarkar

Anjali Shende

Sheetal Jangale

Students of the B.E., Department of Mechanical Engineering, during the academic year 2017-2018, in the partial fulfillment of the requirement for the award of the degree of Bachelor of Engineering (Electronics Engineering) offered by the Rashtrasant Tukadoji Maharaj Nagpur University, Nagpur.

Date: 17/04/2018

Mrs. P.J.Surwanshi
Guide

Dr.S.S.Shriramwar
H.O.D Electronics Engineering

Dr.M.P.Singh
(Principal,P.C.E,Nagpur-44001)

Department of Electronics Engineering,

Priyadarshini Engineering College of Engineering, Nagpur

CERTIFICATE

This is to certify that this is a bonafide record of project work entitled "**Armour-A safety device**" carried out by

Aishwarya Bagde

Akansha Karmarkar

Anjali Shende

Sheetal Jangale

Students of the B.E., Department of Mechanical Engineering, during the academic year 2017-2018, in the partial fulfillment of the requirement for the award of the degree of Bachelor of Engineering (Electronics Engineering) offered by the Rashtrasant Tukadoji Maharaj Nagpur University, Nagpur.

Date: 17/04/2018

Mrs. P.J.Surwanshi
Guide

Dr.S.S.Shriramwar
H.O.D Electronics Engineering

Dr.M.P.Singh
(Principal,P.C.E,Nagpur-44001)

ABSTRACT

Today in the current global scenario the pre- eminent question on everyone's mind is about their safety and security .The only thought striking on the peoples mind is when they will be able to move freely any hour of time on the street without worrying about their safety. An alarming number of crime against all age group people in densely populated cities, security is threatened. Though a sensitive and regularly discussed issue, unfortunately the solutions remains limited to smartphone applications providing alerts to registered friends, family and the authorities. The atrocities against the people can be now brought to an end with help of a device called ARMOUR-A SAFETY DEVICE. Evaluation based on prototype confirms the effectiveness of the proposal. On triggering alert, a GSM module sends text massage to individuals predefined list simultaneously the wireless communication module sends location details to other devices in range. The use this system is not restricted to the possession of both application and wearable device alone, it could also be extended as a standalone application on the phone or a simple wearable device.

INTRODUCTION

1.1 Introduction

The main objective is to design a system which provides solution for the physically handicapped (challenged) people those who can't move by themselves, using speech commands by interfacing the Speech Recognition kit with microcontroller and wheel chair. The voice commands are given to the speech recognition kit with the help of mic and the wheel chair moves according to given directions. The movement of the wheelchair is controlled by the motors and motor drivers connected to the wheels of the chair. The interfacing between speech recognition kit and motors is done by microcontroller. Here in this project the microcontroller used is ATMEGA32 for receiver and ATMEGA162 for transmitter. This concept was taken in this paper to reduce the human efforts in driving.

A wheelchair fitted with obstacle sensor to achieve some independent mobility when any obstacle is there in front of wheelchair. The obstacle sensor will help the rider control the wheelchair by taking over some of the decision for steering and avoiding objects until user is able to handle the job. The voice command is a person dependent, the voice command we provide to the microcontroller is person dependent this is the major advantage of this speech recognition IC. The system comprises of transmitting section and receiving section. . Initially, the voice command is stored in the data base with the help of the function keys. Then the input voice commands are transmitted through wireless. The voice received is processed in the voice recognition system where the feature of the voice command is extracted and matched with the existing sample in the database. The module recognizes the voice and sends control messages to the microcontroller. The proposed Speech Recognition Based Wheelchair Operation allows physically disabled person to control the wheelchair easily without the need to use hands.

VLSI/ EMBEDDED SYSTEM DOMAIN

B. E. Seventh Semester

(Electronics /Electronics & Communication/ Electronics & Telecommunication Engg)

Advanced Digital System Design

Duration: 3 Hrs.
College Assessment: 20 Marks
University Assessment: 80 Marks

Subject Code BEECE704T/ BEETE704T/BEENE704T [4 – 0 – 1 – 5]

Objectives:

1. To motivate the students to learn basic foundation course in VHDL.
2. To address the challenges in Hardware design by discussing the role of digital components in system design
3. To concentrate on HDL based digital design, HDL terminology, architecture and design of combinational and sequential circuit.
4. To learn about modeling of system tested with test benches & synthesis also implementation on FPGA/CPLD.

Outcome: By the end of the course, the students shall be able to

1. Design of combinational & sequential circuit.
2. Develop skilled VLSI front end designers
3. Implementation of digital system.
4. Experimentation on Hardware /Software co-design.

UNIT I (08)

INTRODUCTION TO DIGITAL SYSTEM DESIGN: Device technologies, System representation, Levels of abstraction, Development tasks and EDA software, Development flow, Hardware description language, VHDL in development flow, Basic VHDL concepts.

UNIT II (10)

BASIC LANGUAGE CONSTRUCTS OF VHDL: Skeleton/syntax of VHDL program, elements and program format, Objects, Data type and operators, Concurrent Signal Assignment, Combinational versus sequential circuits, Signal assignment statements, conditional signal assignment, Selected signal assignment, Conditional versus selected signal assignment statements.

UNIT III: (08)

SUBPROGRAM:

Functions, Procedures, attributes, generic, generate, package, IEEE standard logic library, file I/O, test bench, component declaration, instantiation, configuration.

UNIT IV: (10)

FINITE STATE MACHINE: Overview of FSM, FSM representation, Moore machine versus Mealy machine, VHDL representation of an FSM, State assignment, Some FSM design examples – sequence detector, FSM based binary counter.
Analysis of asynchronous sequential circuit – flow table reduction-races-state assignment-transition table and problems in transition table.

UNIT V: **(09)**
HDL SYNTHESIS: The Synthesis Concept, Timing Analysis of Logic Circuits, Efficient Coding Styles, Combinatorial Logic Synthesis, Partitioning for Synthesis, Pipelining Resource sharing, Optimizing arithmetic expressions. Power Analysis of FPGA based system.

UNIT VI: **(10)**
Programmable Logic Devices:-Introduction to place & route process, Architecture of CPLD (Xilinx / Altera), FPGA XILINX 4000 Series ,Overview of PLDs, CPLD, FPGA,
Design Examples: ALU, barrel shifter, 4*4 Keyboard Scanner, multiplier.

TEXT BOOKS:
1. VHDL 4rd Edition Douglas Perry –TMH
2. Fundamentals of Digital Logic with VHDL design –Stephen Brown, Zvonko Vranesic–TMH.
3. Digital Design Principles – Fletcher.
4. VHDL Synthesis –J Bhasker.
5. VHDL Primer–J Bhasker –Pearson Education.

REFERENCE BOOKS:
1. Digital System Design Using VHDL –Charles H. Roth, McGraw Hill Publications.
2. Digital System Design–John Wakerley, McGraw Hill Publications.
3. VHDL –Zainalabedin Navabbi, McGraw Hill publication
4. VHDL– D. Smith,
5. Digital Design with VHDL - Dr.S.S.Limaye, McGraw Hill Publications.

B. E. Seventh Semester

(Electronics Engineering)

EMBEDDED SYSTEMS

Duration: 3 Hr.
College Assessment: 20 Marks
University Assessment: 80 Marks

Subject Code: BEENE702T [4 – 0 – 1 – 5]

Objectives:
1. To give sufficient background for understanding embedded systems design.
2. To give knowledge of RISC processor.
3. To understand connections of various peripherals with microcontroller based system
4. To study of embedded system design aspects.

Outcome: By the end of the course, the students shall be able to
1. design embedded based system .
2. design embedded system based on RTOS and communication protocols.

UNIT I: EMBEDDED SYSTEM INTRODUCTION (10)

History, Design challenges, Optimizing design metrics, Time to market, NRE and UNIT cost design metrics, Application of embedded systems and recent trends in embedded systems.

UNIT II: EMBEDDED SYSTEM ARCHITECTURE (10)

Hardware and software architecture, Processor selection for Embedded System, Memory Architecture and IO devices , Interrupt Service Mechanism ,Context switching, Device Drivers.

UNIT III: ARM PROCESSOR (10)

Architecture and Programming: RISC and CISC, ARM organization, ARM Programmers model, operating modes, Exception Handling, Nomenclature, Core Extensions, ARM Assembly Language Programming, Introduction to ARM instruction set

UNIT IV: PROTOCOLS (08)

Bluetooth, IEEE 802.11 and IEEE 802.16, GPRS, MODBUS CAN, I2C and USB

UNIT V: REAL TIME OPERATING SYSTEM CONCEPTS (10)

Architecture of the kernel, Task scheduler, ISR, Semaphore, Mailbox, Message queues, Pipes, Events, Timers, Memory Management.

UNIT VI: CASE STUDY OF EMBEDDED SYSTEM: (07)

Based on Communication, Automation, Security, Automobile Fields

Text Books:

B. E. Eighth Semester

(Electronics Engineering)

MICROELECTROMECHANICAL SYSTEMS & SYSTEMS ON CHIP

Duration: 3 Hrs.
College Assessment: 20 Marks
University Assessment: 80 Marks

Subject Code: BEENE801T [4 – 0 – 0 – 4]

Objectives:

1. To understand Standard microfabrication techniques and the issues surrounding them.
2. To understand Major classes, components, and applications of MEMS devices/systems and to demonstrate an understanding of the fundamental principles behind the operation of these devices/systems
3. To understand microfabrication techniques and applications to the design and Manufacturing of an MEMS device or a microsystem

---

Outcome: By the end of the course ,the students shall be able to

1. Understand working principles of currently available microsensors, actuators used in Microsystems.
2. Apply scaling laws that are used extensively in the conceptual design of micro devices and systems.
3. Understand the basic principles and applications of micro-fabrication processes, such as photolithography, ion implantation, diffusion, oxidation, CVD, PVD, and etching.
4. Choose a micromachining technique, such as bulk micromachining and surface micromachining for a specific MEMS fabrication process
5. Consider recent advancements in the field of MEMS and devices

---

UNIT 1: Introduction to MEMS (06)

Benefits of Miniaturization, Types of MEMS: Optical MEMS, Bio- MEMS, RF- MEMS, Microfludics, Success Stories, Pressure sensor, Accelerometer, Micro-mirror TV Projector

UNIT 2 : Microfabrication and Micromachining (08)

Integrated Circuit Processes, Bulk Micromachining, Surface LIGA process , *wet & dry etching processes* , Device fabrication using Surface Micromachining example, Microcantilever fabrication

Unit 3: Transducers (10)

Chemical and Biological Transducers: basic concepts of cellular biology, chemical sensors, molecule-based biosensors, cell-basea biosensors, chemical actuators, biological transducers and electrophoresis: optical transducers, thermal transducers, magnetic transducers, RF transducers.

UNIT 4: RF MEMS Devices (08)

Capacitor, Inductor, Switches, and antennas, RF MEMS components in communications, space and defense applications

UNIT 5: Micro System Packaging (06)

Overview of mechanical packaging of microelectronics micro-system packaging.

UNIT 6: Introduction to system-on-chip **(07)**

Design of system on chip , Microsystems technology and applications, core architecture for digital media and the associated compilation techniques

.

TEXT BOOKS:

1." Micro and Smart Systems", Ananthasuresh, G. K., Vinoy, K. J., Gopalakrishnan, S., Bhat, K. N., and Aatre V.K., Wiley-India, NewDelhi, 2010.
2. . "Micromachined Transducers Sourcebook" , Kovacs, Gregory T. A, McGraw-Hill Publications

REFERENCE BOOKS:

1. VLSI Technology, Sze S.M. (ed), McGraw Hill Publications
2. RFMEMS and Their Applications: Vijay Varadan, K. J. Vinoy, K. A. Jose, Wiley, 2002.
3. "MEMS Practical Guide to Design, analysis and Applications", Jan G Korvinik and Oliver Paul William Andrew, Inc Springer.
4. "MEMs & Microsystem Design and Manufacture", Tai-Ran Hsu, McGraw Hill Publication
5. "MEMs", Nitaigour Premchand Mahalik, McGraw Hill Publications

B. E. Eighth Semester

(Electronics Engineering)

CMOS VLSI DESIGN

Duration: 3 Hrs.
College Assessment: 20 Marks
University Assessment: 80 Marks

Subject Code: BEENE803T [4 – 0 – 0 – 4]

Objectives:

1. Motivating students to learn basics of CMOS VLSI design.
2. To learn CMOS device parameters and characteristics.
3. To detect faults and errors in the design.
4. To learn physical design of logic gates.
5. To Study CMOS processing technology.

Outcome: By the end of course, the students shall be able to

1. Design PMOS and NMOS transistor.
2. Implementation different combinational logic circuits.
3. Design layout for various circuits.
4. Design CMOS transistor.
5. Experiment on CMOS logic design.
6. Detect and correct errors in VLSI Design.

UNIT 1: MOS TRANSISTORS (08)

nMOS enhancement and pMOS enhancement transistor, threshold voltage, body effect, MOS effect, MOS device equations, small signal model for MOS transistor

UNIT 2: CMOS INVERTER (10)

Principle of operation, dc characteristics, transient characteristics, β_n/β_p ration, noise margin, static load MOS inverter, transmission gate, introduction to Bi-CMOS inverter.

UNIT 3: STUDY OF CMOS LOGIC (08)

Study of combinational logic, gates, compound gates, multiplexers, and memory elements using CMOS technology.

UNIT 4: CIRCUIT CHARACTERIZATION AND PERFORMANCE ESTIMATION (06)

Resistance and capacitance estimation, switching characteristics, power dissipation, charge sharing.

UNIT 5: VLSI DESIGN **(06)**

VLSI processing integration , layout design rules, and stick diagram representation latch up, CMOS circuits and logic design: transistor sizing, fan-in, fan-out and physical design of simple logic gates, CMOS logic structures and clocking strategies.

UNIT 6: DESIGN FAULTS **(07)**

Types of fault, stuck open, short, stuck at 1, 0 faults, Fault coverage, Need of Design for Testability (DFT), Controllability, predictability, testability, Built In Self Test (BIST), Partial and full scan check, Need of boundary scan check, JTAG, Test Access Port (TAP) controller.

Text Books:

1. "Principal of CMOS VLSI design", Neil H. E. Weste, K. Eshraghian, Addison Wesley VLSI Series.
2. "Digital Interrogated circuits, A Design Perspective" , J. M. Rabaey, A. Chandrakasan, and B. Nikolic., PHI Publications .
3. "CMOS VLSI Design" , Pucknell & K. Eshraghain, PHI Publications

REFERENCES BOOKS:

1. "VLSI Technology", S.M. Sze, McGraw Hill Publications
2. "VLSI Design Technologies for Analog & Digital Circuits", Randall L Gei , McGraw Hill Publications

A

Project Report

On

"AUTOMATIC BARCODE BASED BILL CALCULATION USING SMART TROLLEY"

A project report submitted

in

The partial fulfilment of requirement for the award of

Degree of

Bachelor of Engineering

in

Electronics Engineering

Submitted by

Mr. Badal Pradip Armarkar **Mr. Anuj Vinod Agrawal**

Mr. Aman Kashyap

Guided by

Prof.Mrs.K.M.Bogawar

Department of Electronics Engineering

Priyadarshini college of Engineering, Nagpur

(An institute affiliated to Rashtrasant Tukadoji Maharaj Nagpur University, Nagpur)

2017-2018

Priyadarshini college of Engineering, Nagpur

(An institute affiliated to Rashtrasant Tukadoji Maharaj Nagpur University, Nagpur)

Department of Electronics Engineering

PRIYADARSHINI COLLEGE OF ENGINEERING
NAGPUR

CERTIFICATE

This is to certify that this is a bonafide record of project work entitled **"AUTOMATIC BARCODE BASED BILL CALCULATION USING SMART TROLLEY"** carried out by

Mr. Badal Pradip Armarkar

Mr. Anuj Vinod Agrawal

Mr. Aman Kashyap

Student of the B.E., Department of Electronics Engineering, during the academic year 2017-2018, in the partial fulfilment of requirement for the award of the degree of Bachelor of Engineering (Electronics Engineering) offered by the Rashtrasant Tukadoji Maharaj Nagpur University, Nagpur.

Date:

Prof. Mrs. K.M.Bogawar	Dr.S.S.Shriramwar	Dr.M.P.Singh
Guide (EN Dept)	HOD, Electronics Department	Principal,
P.C.E, Nagpur	P.C.E., Nagpur	P.C.E.,Nagpur

Asstt. Prof. Electronics
Priyadarshini College of
Engg., Nagpur

H.O.D. Electronics
Priyadarshini College of
Engg., Nagpur.

6.1 INTRODUCTION

Embedded C is a set of language extension for the C programming language by the C standard committee to adders commonality issues that exist between C extension for different embedded system. Historically, embedded C programming require nonstandard extension to C language in order to support exotic feature such as fixed point arithmetic, multiple distinct memory banks, and basic I/O operations.

Embedded C use most of the syntax and semantics of standard C, e.g., main () function, variable definition, data type declaration, conditional statement (if, switch case), loops (while, for), functions, arrays and strings, structures and union, bit operation.

6.2 EMBEDDED SYSTEM PROGRAMING

Embedded system programming is different from developing application on a desktop computers. Key characteristics of an embedded system, when compared to PCs, are as follows:

Embedded devices have resource constraints (limited ROM, limited RAM, limited stack space, less processing power). Components used in embedded system and PCs are different; embedded system typically uses smaller, less power consuming components. Embedded system are more tied to the hardware.Two salient features of Embedded Programming are code speed and code size. Code speed is governed by the processing power, timing constraints, whereas code size is governed by available program memory and use of programming language. Goal of embedded system programming is to get maximum features in minimum space and minimum time.Embedded system are programmed using different type of languages: Low Level Language i.e., assembly High Level Language like C, C++, Java, Ada etc. Application Level Language like Visual Basic, scripts, Access, etc.Assembly language maps mnemonics words with the binary machine codes that the processor uses to code the instruction. Assembly language seems to be an obvious choice for programming embedded devices. However, use of assembly language is

Chapter 2: DETAILS OF PROJECT

2.1 Block Diagram

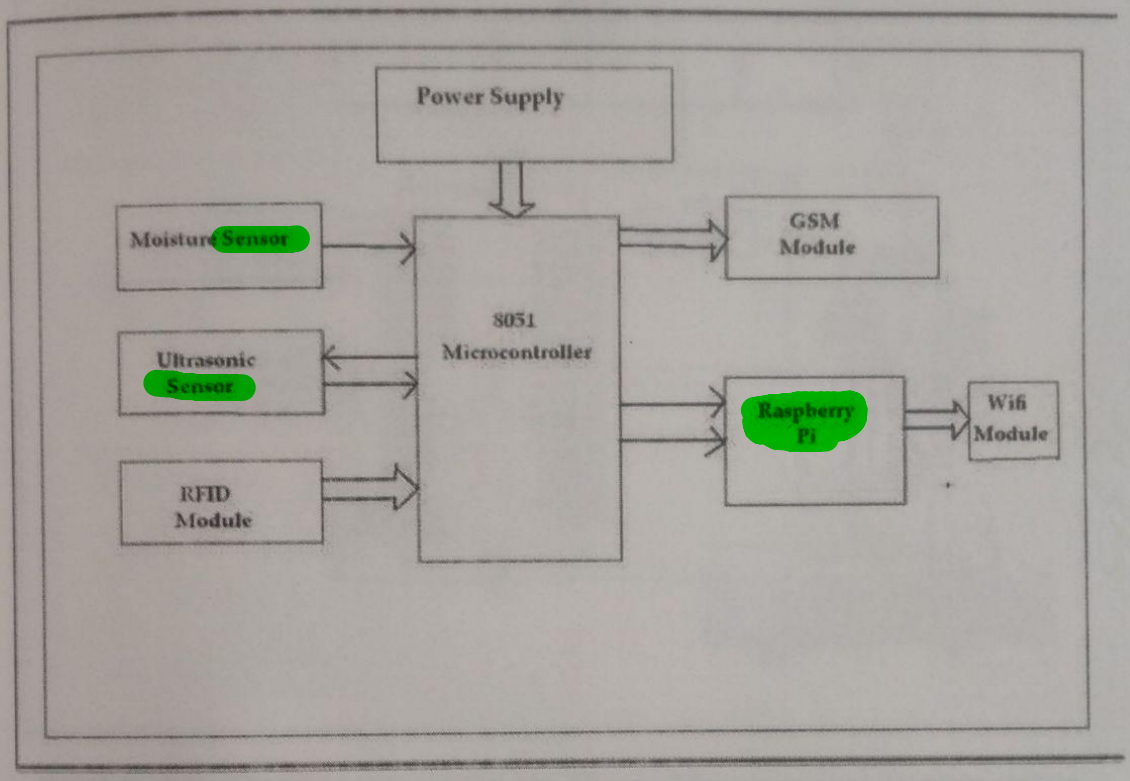

Fig 2.1 Block diagram of Smart Waste Management System using IOT

COMMUNICATIONS DOMAIN

(Electronics / Electronics & Communication / Electronics & Telecommunication Engg)

COMMUNICATION ELECTRONICS

Duration: 3 Hrs.
College Assessment: 20 Marks
University Assessment: 80 Marks

Subject Code: BEENE504T/ BEECE504T/BEETE504T **[4 – 0 – 1 – 5]**

Objectives:

The course objectives are:

1. To study the basic concept of communication and different modulation system based on basic parameters.
2. To study the concept of noise, properties & its effects.
3. To study the AM, FM, PM process & compute modulation Index.
4. To study the fundamentals of AM and FM Receivers.
5. To develop knowledge about fundamentals of Broadband Communication Systems.

Outcome:

At the end of the course the students shall be able to:

1. Demonstrate a basic understanding of the term bandwidth and its application in communications.
2. Describe quantizing and PCM signals, bandwidth and bit rate calculations, study amplitude and angle modulation and demodulation of analog signals etc.
3. Solve the problems involving bandwidth calculation, representation & Generation of an AM sine wave
4. Compare different modulation techniques of Generation of FM (Direct & Indirect Method) 5. Identify, formulate & solve communication engineering problems.

Unit I: Amplitude (Linear) Modulation **(08)**

Base band & Carrier communication, Introduction of amplitude modulation, Equation of AM, Generation of AM (DSBFC) and its spectrum, Modulation Index , Power relations applied to sinusoidal signals, DSBSC – multiplier modulator, Non linear generation, switching modulator, Ring modulator & its spectrum, SSBSC, ISB & VSB, their generation methods & Comparison, AM Broadcast technical standards.

Unit II: Angle Modulation **(12)**

Concept of Angle modulation, Types of Angle Modulation, frequency spectrum, Narrow band & wide band FM, Modulation index, Bandwidth, Phase Modulation, Bessel's Function and its mathematical analysis, Generation of FM (Direct & Indirect Method), Comparison of FM and PM.

Unit III: Pulse Modulation **(10)**

Band limited & time limited signals, Narrowband signals and systems, Sampling theorem in time domain, Nyquist criteria, Types of sampling- ideal, natural, flat top, Aliasing & Aperture effect. Pulse Analog modulation: PAM PWM & PPM.

PCM – Generation & reconstruction, Bandwidth requirement of PCM.Differential PCM, Delta Modulation & Adaptive DM. (Only Block diagram treatment).

Unit IV: Noise (10)

Sources of Noise, Types of Noise, White Noise, Thermal noise, shot noise, partition noise, Low frequency or flicker noise, burst noise, avalanche noise, Signal to Noise Ratio, SNR of tandem Connection, Noise Figure, Noise Temperature, Friss formula for Noise Figure, Noise Bandwidth.

Unit V: AM and FM Receivers (10)

Communication Receiver, Block Diagram & special Features

Block diagram of AM and FM Receivers, Super heterodyne Receiver, Performance characteristics: Sensitivity, Selectivity, Fidelity, Image Frequency Rejection, Pre-emphasis, De-emphasis

AM Detection: Rectifier detection, Envelope detection, Demodulation of DSBSC: Synchronous detection, Demodulation of SSBSC.

FM Detection: Foster Seelay FM Detector & FM detection using PLL

Unit VI: Broadband Communication Links & Multiplexing: (10)

Multiplexing: Frequency Division Multiplexing, Time Division Multiplexing, Code Division Multiplexing.

Short and Medium Haul Systems: Coaxial Cables, Fiber optic links, Microwave Links, Tropospheric scatter Links.

Long Haul Systems: Submarine cables.

Books:

Text Books:

1. Kennedy & Devis : Electronic Communication Systems , Tata McGraw Hills Publication(Fourth Edition)
2. Dennis Roddy & Coolen - Electronic Communication, Pearson Education (Fourth Edition)
3. B. P. Lathi: Modern Digital and Analog. Communication Systems: Oxford Press Publication (Third Edition)

Reference Books:

1. Simon Haykin: Communication Systems, John Wiley & Sons (Fourth Edition)
2. Taub & Schilling: Principles of Communication Systems, Tata McGraw-Hill
3. Leon W.Couch, II: Digital and Analog Communication Systems, Pearson Education (Seventh Edition)
4. Electronic Communication Systems, Roy Blake, CENGAGE Learning.

B. E. Sixth Semester

(Electronics Engg)

Microwave Engineering

Duration: 3 Hrs.
College Assessment: 20 Marks
University Assessment: 80 Marks

Subject Code: BEENE601T [4 – 0 – 1 – 5]

Objectives:
The Course Objectives are:

1. To study the principles of the advanced microwave engineering.
2. To study the design of passive and active microwave components and microwave circuits including
   Micro strip line, guided wave device
3. To study Klystron amplifier and oscillator.
4. To study magnetron & other devices.
5. To study the free space communication link and its mathematical analysis.

Outcome:
At the end of the course the students shall be able to:

1. Describe the use of active and passive microwave devices.
2. Analyze different UHF components with the help of scattering parameter. 3. Describe micro strip lines.
4. Demonstrate the use of different Klystrons, magnetron devices.
5. Analyze the different power distribution Tees.
6. Describe the basic communication link design, signal power budget, noise evaluation and link carrier to noise ratio.
7. Describe the transmission and waveguide structures and how they are used as elements in impedance matching and filter circuits.

Unit I: Microwave Active Devices (O-type) (10)

Interaction of electron beam with electromagnetic field, power transfer condition. Principles of working of two cavity and Reflex Klystrons, arrival time curve and oscillation conditions in Reflex klystrons, mode-frequency characteristics, Effect of repeller voltage variation on power and frequency of output. Slow wave structures, Principle and working of TWT amplifier & BWO Oscillator.

Unit II: Microwave Active Devices (M-type) **(10)**

Principle of working of M-type TWT, Magnetrons, Electron dynamics in planar and cylindrical Magnetrons, Cutoff magnetic field, phase focusing effect, mode operation, Mode separation techniques, Tuning of magnetron

Unit III: Transmission line **(10)**

Input impedance, Standing wave distribution, Quarter Wave and Stub Matching using Smith chart, losses in Transmission lines, Planar Transmission line types, Introduction - Types of MICs and their technology, Fabrication process of MMIC, Hybrid MICs.

Unit IV: Microwave Networks and passive Components **(10)**

Transmission line ports of microwave network, Scattering matrix, Properties of scattering matrix of reciprocal, nonreciprocal, loss-less, Passive networks, Examples of two, three and four port networks, wave guide components like attenuator. Principle of operation and properties of E-plane, H-plane Tee junctions of wave guides, Hybrid T, Directional couplers, Microwave resonators-rectangular, Excitation of wave guide and resonators .Principles of operation of non-reciprocal devices, properties of ferrites, Gyrators ,Isolators ,Circulator and phase shifters.

Unit V: Microwave Measurements **(10)**

Function of Tuning Probes, Detector mounts and Detector diode, Slotted line section and VSWR meter, Measurement of wave-guide impedance at load port by slotted line, Measurement of scattering matrix parameters, High, Medium and low-level power measurement techniques, Characteristics of bolometer, bolometer mounts, Power measurement bridges, Calorimetric method, Microwave frequency measurement techniques, calibrated resonators (transmission and absorption type), Network Analyzer and its use in measurements.

Unit VI: Microwave Solid State Devices and Application **(10)**

PIN diodes-Properties and applications, Microwave detector diodes-detection characteristics, Varactor diodes, Parametric amplifier fundamentals-Manley-Rowe Power relation, MASERS, Transferred electron devices, Gunn effect, Various modes of operation of Gunn oscillator, IMPATT, TRAPATT and BARITT.

Books:

Text Books:

1. Samuel Y. Liao, 'Microwave Devices and Circuits', Pearson Education, 3rd Edition.
2. R. E. Collins: Foundations of Microwave Engineering, 2nd Edition, Wiley Publications.
3. R. Chatterjee, 'Elements of Microwave Engineering', Prentice, September 1986
4. D. M. Pozar: Microwave Engineering, 3rd Edition, Wiley Publications.

B. E. Sixth Semester

(Electronics / Electronics & Communication/ Electronics & Telecommunication Engg)

DIGITAL COMMUNICATION

Duration: 3 Hrs.
College Assessment: 20 Marks
University Assessment: 80 Marks

Subject Code: BEENE604T/ BEECE604T/ BEETE604T [4 – 0 – 1 – 5]

Objectives:

The Course Objectives are:

1. To study basic components of digital communication systems.
2. To understand the designing aspects of optimum receivers for digital modulation techniques.
3. To study the analysis of error performance of digital modulation techniques.
4. To study the designing of digital communication systems under given power, spectral and error performance constraint

Outcome:

After completing this course students shall be able to:

1. Explain the working principles of basic building blocks of a digital communication system.
2. Describe a random process in terms of its mean and correlation functions and characterize special Gaussian and Rayleigh distributions.
3. Explain receiver techniques for detection of a signal in AWGN channel
4. Describe digital modulation techniques.
5. Demonstrate the concept of coding and decoding techniques.
6. Model digital communication systems using appropriate mathematical techniques.
7. Describe spread spectrum analysis.

UNIT-I:-Digital Communication Concept (10)

Review of Random variables, PDFs & CDFs, Central limit Theorem. Model of digital communication system, Gram Schmitt Orthogonalization procedure, signal space concept, Geometric interpretation of signals, probability of error, correlation receiver, matched filter receiver.

UNIT-II: - Source & Waveform Coding Methods (10)

Source coding Theorem, Huffman Coding, L-Z encoding algorithm, rate distortion theory for optimum quantization, scalar & vector quantization,.

Waveform coding methods: ADPCM, Adaptive Sub-Band & Transform coding, LP & CELP coding.

UNIT-III:-Digital Modulation Techniques (10)

Coherent Binary QPSK, MSK, Gaussian MSK, DPSK, Memory less modulation methods, linear modulation with memory, nonlinear modulation methods with memory: CPFSK, CPM.

UNIT-IV:-Channel Coding (PART-1) **(10)**

Introduction to Galois field, Construction of Galois field GF (2 m) & its basic properties. Types of error control: Forward error correction (FEC), Automatic repeat request system (ARQ). Convolution encoding and decoding distance properties, Viterbi algorithm and Fano algorithm.

UNIT-V: - Channel Coding (PART-II) **(10)**

Trellis coded modulation, Introduction to Turbo coding, & Reed Solomon Codes: encoding & decoding, Low density parity check coding (LDPC)

UNIT-VI: **(10)**

Spread - Spectrum methods: - Study of PN sequences, direct sequence methods, Frequency hop methods, slow and fast frequency hop, performance analysis, synchronization methods for spread spectrum. Application of spread spectrum, CDMA, Introduction to OFDM

Books:

Text Books:

1. Digital communication: John G Prokis (TMG)
2. Digital communication: Simon Haykin (WEP)

Reference Books:

1. Lathi B.P. - Modern Digital and Analog communications systems - PRISM Indian Ed.
2. Digital Communication: J.S.Chitode
3. Digital Communication (Fundamentals & applications): Bernard Scalr
4. Introduction to Error Control Codes: Salvatore Gravano
5. OFDM For wireless communication systems: Ramjee Prasad
6. Modern Communication systems (Principles and application): Leon W. Couch II (PHI)
7. Error Control Coding: Shu Lin & Daniel J.Costello

B. E. Seventh Semester

(Electronics /Electronics & Communication/ Electronics & Telecommunication Engg)

OPTICAL COMMUNICATION

Duration: 3 Hrs.
College Assessment: 20 Marks
University Assessment: 80 Marks

Subject Code: BEECE703T/ BEETE703T/ BEENE703T [4 – 0 – 0 – 4]

Objectives:

1. To understand optical fiber technology to sophisticated modern telecommunication systems.
2. To understand the fundamental behavior of the individual optical components, describes their interactions with other devices in an optical fiber.
3. To measure & analyze different measurements, parameters & properties of optical fiber.

Outcome: By the end of the course, the students shall be able to

1. learn the basic elements of optical fiber.
2. understand the different kinds of losses, signal distortion in optical wave guides & other signal degradation factors.
3. classify various optical source materials, LED structures, LASER diodes.
4. learn the fiber optic receivers such as PIN, APD diodes, receiver operation & performance.
5. understand the operational principal of WDM, SONET, measurement of attenuation, dispersion, refractive index profile in optical fibers.

UNIT I: OVERVIEW OF OPTICAL FIBER COMMUNICATION (05)

Introduction, advantages, disadvantages and applications of optical fiber communication, Ray theory, classification of Optical Fibers

UNIT II: TRANSMISSION CHARACTERISTICS OF OPTICAL FIBERS (10)

Fiber manufacturing & Fiber materials, manufacturing methods, *Attenuation, Absorption, scattering losses, bending loss, dispersion, Intra modal dispersion, Inter modal dispersion.*

UNIT III: OPTICAL SOURCES AND COUPLERS & CONNECTORS OF FIBER (08)

Introduction, fiber alignment and joint loss, single mode fiber joints, fiber splices, fiber connectors and fiber couplers.

Optical sources: LED's, LASER diodes.

UNIT IV: OPTICAL DETECTORS AND RECEIVER (06)

Photo detectors, Photo detector noise, Response time, comparison of photo detectors

Optical Receiver Operation, receiver sensitivity, quantum limit, coherent detection, burst mode receiver operation, Analog receivers

UNIT V: ANALOG AND DIGITAL LINKS (08)

Analog links – overview of analog links, CNR, multichannel transmission techniques, Digital links – point–to–point links, System considerations, link power budget, rise time budget, transmission distance for single mode links.

UNIT VI: WDM CONCEPTS AND COMPONENTS **(08)**

Operational Principles of WDM, basic applications and types of optical amplifiers, semiconductor optical amplifiers, EDFA. Measurement of Attenuation and dispersion. Study of various application of optical fiber communication.

TEXT BOOKS:

1. "Optical Fiber Communication", Gerd Keiser, 3rd Ed., McGraw Hill,
2. "Optical Fiber Communications", John M. Senior, Pearson Education. 3rd Impression, 2007.

REFERENCE BOOK:

1. Fiber Optic Communication - Joseph C Palais: 4th Edition, Pearson Education.
2. "TextBook on Optical Fiber Communication & its Application", S.C. Gupta, PHI Publications
3. "Optical Communication & Networks", M.N. Bandopadhyay, PHI Publications

B. E. Eighth Semester

(Electronics /Electronics & Communication/ Electronics & Telecommunication Engg)

COMPUTER COMMUNICATION NETWORK

Duration: 3 Hrs.
College Assessment: 20 Marks
University Assessment: 80 Marks

Subject Code : BEECE802T/ BEETE802T/ BEENE802T [4 – 0 – 1 – 5]

Objectives:

1. To explain the basic concept of computer communication network.
2. To explain the computer network layer.
3. To explain IP addressing scheme.
4. To explain network process.
5. To study Hardware aspect of network communication.
6. To make selection of IEEE lAN standards.
7. To explain network security & administration.

Outcome: By the end of course, the students shall be able to

1. Understand the requirement of theoretical & practical aspect of computer network.
2. Understand the network traffic in computer network.
3. Describe various protocols used in network.
4. Describe the concept of computer network security.
5. Understand the different wired &wireless LAN stds.& Routers.

Unit 1: Introduction to Computer Networks (06)

Uses of computer Network, Network Software-design Issues for layers, Service primitives and relationship of services to Protocols, Reference models-OSI &TCP/IP network architectures introduction, Example of networks-X.25, Frame Relay & ATM, Protocols and Standards.

Unit 2: Physical Layer (10)

Physical layer-Data rate limits, Transmission media-guided and Unguided, Switching systems-Circuit switching, Datagram Switching & Virtual circuit switching, Structure of circuit and packet switch, cable modem and DSL technologies, SONET basics, selection of IEEE std 802.11 ,a,b,c,g.

Unit 3: Data link layer (10)

Data link layer: Framing, Flow & Error control Protocols, HDLC, PPP, Multiple access techniques-random access, controlled access & Channelization, Ethernet types-bridged, Switched, Full duplex, Fast & gigabit Ethernet, Introduction to Data link layer in 802.11 LAN, Connecting devices like passive hubs, repeaters, Active hubs, Bridges, Two-layer Switches, Routers, three layer switches, Gateway etc., Backbone networks, Virtual LANs, Simple Router architecture, Sliding window protocol.

Unit 4: Transport Layer and Network Layer (10)

Transport layer-*Process to process delivery, Connection oriented & Connectionless Transport, UDP, TCP, Congestion control and Quality of Service.*

Network Layer: *IPv4 address, IPv6 address, Address mapping-ARP, RARP & DHCP, IPv4 datagram detail format, IPv6 datagram detail format, ICMP, IGMP, Network layer issues like Delivery, forwarding, intra-domain and Inter-domain routing, Routing algorithms like Shortest path routing, Flooding, Distance Vector Routing, Link State Routing, Path vector routing etc., Addressing types-Physical, Logical & port address.*

Unit 5: Application Layer **(10)**

Application layer protocols and applications like Ping, FTP, telnet, http (www), SMTP, SNMP, Trace route, TFTP, BOOTP, DNS, NFS, RPC, X-server, E-mail, Introduction to streaming Audio/Video,P2P file sharing, Introduction to socket programming.

Unit 6: Basics of Network Security and Network administration. **(09)**

Network security: *Introduction to Cryptography, Secret key algorithm, public key algorithm, Hash Functions, basic ITU-T Recommendation - X.805 Security Architecture, Basics of Security Requirements/Services/Dimensions, Basics of Security attacks, Basics of Security mechanisms / solutions.*

Network Administration: *UTP Cabling for PC to PC communication, Network tester, network monitoring, Protocol Analyzer, Network Simulation, internet access through Dialup/DSL/Leased Line/Mobile handset.*

Text Books

1. Behrouz A. Forouzan," Data Communications and Networking", 4th Edition, Tata McGraw Hill
2. Andrew Tenenbaum, "Computer Networks", 4th Edition, Pearson Education.
3. Kurose & Ross, "Computer Networking- A top Down Approach featuring the Internet", 3rd edition, Pearson Education.
4. William Stallings, "computer Networks and Cryptography", 3rd edition, Pearson Education

Reference Books

1. Behrouz A. Forouzan, "TCP/IP protocol Suit", 3rd edition, Tata McGraw Hill Publications
2. Stevens,"TCP/IP illustrated Volume - I & II", Pearson education.
3. Feibel Werner, "Encyclopaedia of networking", Pearson education.
4. Frank J. Derfler, "Practical Networking", 2nd edition, QUE international Publishing.
5. Atul Kahate, "Cryptography and Network Security", 2nd edition, TATA McGraw Hill
6. Kenneth Mansfield, "Computer Networking from LANs to WANs: Hardware, software & Security", CENGAGE learning.
7. Nurul Sarkar, "Computer Networking & Hardware concepts", Information Science Publisher, USA.

B. E. Seventh Semester

(Electronics Engineering)

Elective 1-MOBILE COMMUNICATION

Duration: 3 Hrs.
College Assessment: 20 Marks
University Assessment: 80 Marks

Subject Code: BEENE705T [3 – 0 – 1 – 4]

Objectives:

1. To understand the basic knowledge about the generation of mobile communication.
2. To familiarize with the recent trends in the field of wireless communication
3. To study and relate the different types of mobile communication system.
4. To study architecture of mobile communication.
5. To get knowledge about application's of mobile communication

---

Outcome: At the end of the course, the student should be able to :

1. Have an introduction to Mobile Communication
2. Understand the Cellular Systems
3. Know the concept of Switching systems
4. Understand the concept of Base station subsystems

UNIT- I: (06)

The cellular concept: Evolution of mobile radio communication, Cellular telephone system, frequency reuse, channel assignment and handoff strategies, interference and system capacity, trunking and grade of service, improving capacity in cellular system.

UNIT II: (08)

The mobile radio environment: causes of propagation path loss, causes of fading -long term and short term, definition of sample average, statistical average, probability density function, cumulative probability distribution, level crossing rate and average duration of fade, delay spread, coherence bandwidth, inter-symbol interference.

UNIT III: (08)

Modulation techniques for mobile communication: BPSK, QPSK. Transmission and detection techniques, 4 -QPSK transmission and detection techniques, QAM, GMSK.

UNIT IV: **(08)**

Equalization, diversity and channel coding: fundamentals of equalization, space polarization, frequency and time diversity techniques, space diversity, polarization diversity, frequency and time diversity, fundamentals of channel coding.

UNIT V: **(08)**

Multiple access techniques: Introduction to multiple access, FDMA, TDMA, Spread spectrum multiple access, frequency hopped multiple access(FHMA), code division multiple access (CDMA), space division multiple access (SDMA).

UNIT VI: **(07)**

GSM- global system for mobile: services and features, GSM system architecture, GSM radio subsystem, GSM channel types, GSM frame structure, signal processing in GSM, introduction to CDMA digital cellular standard.

TEXT BOOKS:

1. "Wireless Communication – Principles and practice", T S. Rappaport, Prentice Hall PTR, upper saddle river, New Jersey.
2. "Mobile Communications – Design fundamentals", William C. Y. Lee, John Willey Publications

REFERNCE BOOKS:

1. "Wireless digital communication", Kamilo Feher, PHI Publications
2. "Mobile Cellular Communication", W.C.Y.Lee, Mc Graw Hill Publications
3. "The Mobile Radio Propagation channel" , J.D. Parson, Wiley Publication.

B. E. Eighth Semester
(Electronics Engineering)

Elective 2- WIRELESS SENSOR NETWORK

Duration: 3 Hrs.
College Assessment: 20 Marks
University Assessment: 80 Marks

Subject Code: BEENE804T [3 – 0 – 1 – 4]

Objectives:

1. Introduce wireless sensor network architectures and communications protocols provide an understanding of mutual relationships and dependencies between different protocols and architectural decisions by offering an in-depth investigation of relevant protocol mechanisms.
2. Introduce sensor network platforms, operating systems and programming tools for sensor networks.
3. Introduce design spaces for sensor networks
4. Study wireless sensor network solutions with practical implementation examples and case studies.
5. Introduction to wireless sensor networks: Challenges for WSNs, enabling technologies.
6. Single node architecture: Hardware components, energy consumption of sensor nodes, operating systems and execution environments.

Outcome: By the end of this course, the students shall be able to

1. Demonstrate advanced knowledge and understanding of the engineering principle of sensor design, signal processing, established digital communications techniques, embedded hardware and software, sensor network architecture, sensor networking principles and protocols.
2. Demonstrate a computing science approach, in terms of software techniques, for wireless sensor networking with emphasis on tiny sensors, sensor specific programming languages, RFID technology, embedded architectures, software program design and associated hardware, data fusion.
3. Demonstrate knowledge of the associated business, legislative, safety and commercial issues; future technological advances and the way these will impact on the engineering product enterprise process.

Unit: I (08)

Introduction and Overview of Wireless Sensor Networks, Commercial and Scientific Applications of Wireless Sensor Networks, Basic Wireless Sensor Technology, Sensor Taxonomy, wireless network environment, wireless network trends.

Unit: II (08)

Radio technology primer, Available wireless technologies, Wireless Sensors Networks Protocols, Physical Layer, Fundamentals of Medium Access Control Protocols for Wireless Sensor Networks, MAC protocols for WSN, Case Study, IEEE 802.15 4LR WPAN, Standard case study.

Unit: III **(08)**

Sensors Network Protocols, Data dissemination and gathering, Routing Challenges and design issues in wireless sensor network, Routing strategies in WSN.

Unit: IV **(08)**

Protocols, Transport Control Protocols for Wireless Sensors Networks, Traditional transport control protocol, transport protocol design issues, examples of existing transport control protocol, performance of TCP.

Unit: V **(06)**

Middleware for Sensor Networks, WSN middleware principles, Middleware architecture, existing middleware.

Unit: VI **(07)**

Network Management for Wireless Sensor Networks, Requirements, Design issues, Examples of management Architecture, Performance and Traffic Management Issues.

Text Books:

1. Morgan Kaufmann F. Zhao and L. Guibas, ' Wireless Sensor Networks',San Francisco, 2004.
2. C. S. Raghavendra, Krishna M. Sivalingam, Taieb F. Znati , 'Wireless sensor networks',Edition: 2, Published by Springer, 2004 ISBN 1402078838, 9781402078835

Reference Books:

1. "Wireless Sensor Networks: Technology, Protocols, and Applications", Kazem Sohraby, Daniel Minoli, Taieb Znati, Wley Interscience Publication, 2007
2. "Computer Networks" ,Andrew Tanenbaum, 4th ed, Pearson Education,2007

B. E. Eighth Semester
(Electronics Engineering)

Elective 3- DATA COMPRESSION & ENCRYPTION

Duration: 3 Hrs.
College Assessment: 20 Marks
University Assessment: 80 Marks

Subject Code: BEENE805T [3 – 0 – 1 – 4]

Objectives:

1. To understand the different text compression technique.
2. To study the various audio compression scheme.
3. To verify different video compression & image compression methods.
4. To have the knowledge of various encryption technique.
5. To acquire the information about different authentication technique.

Outcome: By the end of the course, the students shall be able to

1. implement various text, audio, video, compression technique.
2. provide various authentication using digital communication.
3. gain the knowledge of encryption techniques application to digital communication.

Unit 1: TEXT COMPRESSION (08)

Shannon Fano Coding, Huffmann coding, Arithmetic coding and dictionary techniques-LZW, family algorithms, Entropy measures of performance and Quality measures.

Unit 2: AUDIO COMPRESSION (08)

Digital Audio, Lossy sound compression, μ-law and A-law companding, DPCM and ADPCM audio compression, MPEG audio standard, frequency domain coding, format of compressed data.

Unit 3: IMAGE AND VIDEO COMPRESSION (08)

Lossless techniques of image compression, gray codes, Two dimensional image transforms, JPEG, JPEG 2000, Predictive Techniques PCM and DPCM. Video compression and MPEG industry standard.

Unit 4: CONVENTIONAL ENCRYPTION (08)

Introduction, Types of attacks, Steganography, Data Encryption Standards, Block Cipher Principle, S-box design, triple DES with two three keys.

Unit 5: PUBLIC KEY ENCRYPTION AND NUMBER THEORY **(08)**

Euler's theorems, Chinese remainder theorem, Principles of public key cryptography, RSA algorithm, Diffie-Hellman Key Exchange. Elliptic curve cryptology, message authentification and Hash functions, Hash and Mac algorithms, Digital signatures.

Unit 6: SYSTEM SECURITY & CASE STUDIES **(05)**

Intruders, Viruses, Worms, firewall design, antivirus techniques, digital Immune systems, Certificate based & Biometric authentication, Secure Electronic Payment System.

Text Books

1. Data Compression – David Salomon , Springer Publication, 4th Edition.
2. Introduction to Data Compression – Khalid Sayood, Morgan Kaufmann Series, 3rd Edition
3. Cryptography and Network Security – William Stallings, Pearson Education Asia Publication,
4. Cryptography and Network Security – Behrouz Forouzan, McGraw-Hill, 1st Edition.

Reference Books:

1. The Data Compression Book – Mark Nelson, BPB publication, 2nd Edition
2. Applied Cryptography – Bruce Schnerer, John Willey & Sons Inc. Publication, 2nd Edition
3. Cryptography & Network Security – Atul Kahate, Tata McGraw Hill, 2nd Edition
4. Cryptography and Network Security – Behrouz A. Forouzan , Special Indian Addition, SIE
5. Network Security & Cryptography – Bernard Menezes, Cenage Learning

A

Project Report

On

"AUTOMATIC BARCODE BASED BILL CALCULATION USING SMART TROLLEY"

A project report submitted

in

The partial fulfilment of requirement for the award of

Degree of

Bachelor of Engineering

in

Electronics Engineering

Submitted by

Mr. Badal Pradip Armarkar **Mr. Anuj Vinod Agrawal**

Mr. Aman Kashyap

Guided by

Prof.Mrs.K.M.Bogawar

Department of Electronics Engineering

Priyadarshini college of Engineering, Nagpur

(An institute affiliated to Rashtrasant Tukadoji Maharaj Nagpur University, Nagpur)

2017-2018

Priyadarshini college of Engineering, Nagpur

(An institute affiliated to Rashtrasant Tukadoji Maharaj Nagpur University, Nagpur)

Department of Electronics Engineering

CERTIFICATE

This is to certify that this is a bonafide record of project work entitled **"AUTOMATIC BARCODE BASED BILL CALCULATION USING SMART TROLLEY"** carried out by

Mr. Badal Pradip Armarkar

Mr. Anuj Vinod Agrawal

Mr. Aman Kashyap

Student of the B.E., Department of Electronics Engineering, during the academic year 2017-2018, in the partial fulfilment of requirement for the award of the degree of Bachelor of Engineering (Electronics Engineering) offered by the Rashtrasant Tukadoji Maharaj Nagpur University, Nagpur.

Date:

Prof. Mrs. K.M.Bogawar	Dr.S.S.Shriramwar	Dr.M.P.Singh
Guide (EN Dept)	HOD, Electronics Department	Principal,
P.C.E, Nagpur	P.C.E., Nagpur	P.C.E.,Nagpur

Asstt. Prof. Electronics
Priyadarshini College of
Engg., Nagpur

H.O.D. Electronics
Priyadarshini College of
Engg., Nagpur.

5.1 INTRODUCTION

This radio frequency (RF) transmission system employs Amplitude Shift Keying (ASK) with transmitter/receiver (Tx/Rx) pair operating at 434 MHz. The transmitter module takes serial input and transmits these signals through RF. The transmitted signals are received by the receiver module placed away from the source of transmission. The system allows one way communication between two nodes, namely, transmission and reception. The RF module has been used in conjunction with a set of four channel encoder/decoder ICs. Here HT12E & HT12D have been used as encoder and decoder respectively. The encoder converts the parallel inputs (from the remote switches) into serial set of signals. These signals are serially transferred through RF to the reception point. The decoder is used after the RF receiver to decode the serial format and retrieve the original signals as outputs. These outputs can be observed on corresponding LEDs.

5.2PIN CONFIGURATION

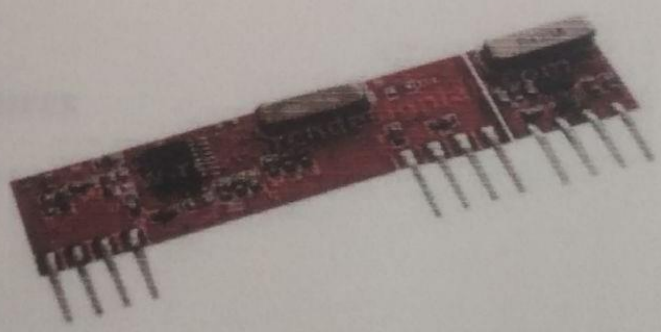

Fig 5.1 RF Transreceiver

5.3 WORKING PRINCIPLE

The RF module, as the name suggests, operates at radio frequency. The corresponding frequency range varies between 30 kHz & 300 GHz. In this RF system, the digital data is represented as variations in the amplitude of carrier wave. This kind of modulation is known as Amplitude Shift Keying (ASK). Transmission through RF is better than IR (infrared) because of many reasons. Firstly, signals through RF can travel through larger distances making it suitable for long range applications. Also, while IR mostly operates in line-of-sight mode, RF signals can travel even when there is an obstruction between transmitter & receiver. Next, RF transmission is more strong and reliable than IR transmission. RF communication uses a specific frequency unlike IR signals which are affected by other IR emitting sources. This RF module comprises of an RF transmitter and an RF receiver. The transmitter/receiver (Tx/Rx) pair operates at a frequency. An RF transmitter receives serial data and transmits it wirelessly through RF through its antenna connected at pin4. The transmission occurs at the rate of 1Kbps - 10Kbps.The transmitted data is received by an RF receiver operating at the same frequency as that of the transmitter. The RF module is often used along with a pair of encoder/decoder. The encoder is used for encoding parallel data for transmission feed while reception is decoded by a decoder.

5.4 Features

Easy to use.

TX:

Power supply and/or modulation input voltage : 2.2 to 5.5v.

Operating temperature: -40 to +80C.

RX:

Power supply and/or modulation input voltage :.5v.

WASTE MANAGEMENT SYSTEM USING IOT

A project report submitted

in

the partial fulfilment of requirement for the award of

degree of

Bachelor of Engineering

In

Electronics Engineering

By

Mr. Amar Pokle

Ms. Apurva Thakre

Mr.Tathastu Naranje

Ms.Ashvini Tamgadge

Ms.Poojarthi Gattuwar

Guide

Dr. Mrs. M.V. Vyawahare

Department of Electronics Engineering

Priyadarshini College of Engineering, Nagpur

(An Institute to Rashtrasant Tukadoji Maharaj Nagpur University,Nagpur)

(2017-18)

Department of Electronics Engineering,

Priyadarshini College of Engineering

Nagpur

CERTIFICATE

This is to certify that this is a bonafide record of project work entitled **"Waste Management System Using IOT"**

Carried out by

Mr. Amar Pokle

Ms.Ashvini Tamgadge

Mr.Tathastu Naranje

Ms.Apurva Thakre

Ms.Poojarthi Gattuwar

Submitted to the Rashtrasant Tukadoji Maharaj University, Nagpur in partial fulfilment of the award of Bachelor of Engineering, in Electronics and has been carried out at the Department of Electronics Engineering, Priyadarshini College of Engineering, Nagpur during the academic year 2017-2018.

Date:

23/04/2018

Dr.Mrs.M.V.Vyawahare
Project Guide
Department of Electronics Engineering

Assitt. Prof. Electronics
Priyadarshini College of Engg., Nagpur

Dr.S.S.Shriramwar
H.O.D
Department of Electronics Engineering

H.O.D. Electronics
Priyadarshini College of Engg., Nagpur.

mpsingh

Dr.M. P. Singh
Principal
Priyadarshini College of Engineering

Principal
Priyadarshini College of Engg.
Nagpur.

ABSTRACT

Many times, in our city we see that the garbage bins or dustbins placed at public places are overloaded. It creates unhygienic conditions for people as well as ugliness to that place leaving bad smell. To avoid all such situations we are going to implement a project called Smart Waste Management System using IOT.

These dustbins are interfaced with microcontroller based system having IR wireless systems along with central system showing current status of garbage, on mobile web browser with html page by Wi-Fi. Hence the status will be updated on to the html page. Major part of our project depends upon the working of the Wi-Fi module, essential for its implementation. The main aim of this project is to reduce human resources and efforts along with the enhancement of a smart city vision.

Owing to a paradigm shift toward Internet of Things (IOT), researches into IOT services have been conducted in a wide range of fields. As a major application field of IOT, waste management has become one such issue. The absence of efficient waste management has caused serious environmental problems and cost issues. We here propose a probable solution to thisproblem for urban cities. Using IOT technologies for waste management is one probable solution that we have proposed through our work. We explain our idea with the help of a simulation model. This model consists of Raspberry-pi controller, a few garbage bins loaded with sensors and they are monitored continuously through a web. This system also has a scope for citizen participation, wherein any grievances from citizens related to waste management is heard.

We have designed a model for a 'Smart Dustbin' which indicates directly that the dustbin is filled to a certain level by the garbage and cleaning or emptying them is a matter of immediate concern. This prevents lumping of garbage in the roadside dustbin which ends up giving foul smell and illness to people. The developing system will have a complete monitoring system which is IOT based. Also the information will be directly sent to the internet from system; no need of computer for transmission purpose which reduces the cost.

OTHERS DOMAIN

B. E. Third Semester

(Electronics / Electronics & Communication / Electronics & Telecommunication Engg.)

OBJECT ORIENTED PROGRAMMING & DATA STRUCTURE

Duration : 3 Hr.
College Assessment : 20 Marks
University Assessment : 80 Marks

Subject Code : BEENE304T/ BEECE304T/ BEETE304T **[4 – 0 – 1 – 5]**

Objectives :

1. To understand the concept of object oriented programming and develop skills in C++ Language.
2. Access how the choice of data structures and algorithm design methods impacts the performance of programs.
3. To Choose the appropriate data structure and algorithm design method for a specified application.
4. Write programs using 'C++ Language'.

Outcomes :

On successful completion of this subject the student will be able to:

1. Be able to implement the concept of object oriented programming in any programming language.
2. Explain the basic data structures and algorithms for manipulating them.
3. Implement these data structures and algorithms in the C++ language.
4. Integrate these data structures and algorithms in larger programs.
5. Code and test well-structured programs of moderate size using the C++ language.
6. Apply principles of good program design to the C++ language.

Unit I: Introduction to Object Oriented Programming (12)

Basic concepts of object oriented programming-Benefits of OOP's-Application OOP-Structure of C++ program-Basic Data type-Derived Data type-User defined data type-Operators in C++, Class Members, Access Control, Class Scope, Control Statements, Constructor and Destructor, parameter passing method, inline function, static class members, this pointer, friend function, Dynamic memory allocation and de allocation (new and delete), exception handling.

Unit II: Features of Object Oriented Programming (06)

Function Overloading, Generic Programming- Function and class templates, Defining operator overloading-overloading unary operator, overloading binary operator-rules for operator overloading.

Unit III: Inheritance

(10)

Inheritance- Inheritance basics, base and derived classes, inheritance types:-single inheritance, multilevel inheritance, multiple inheritance, hierarchal inheritance, hybrid inheritance, and virtual base class –run time polymorphism using virtual function, pure virtual function, and abstract classes.

Unit IV: Introduction to Data structure

(10)

Arrays-Introduction-Linear arrays-representation of linear arrays in memory, Sorting-selection sort, Insertion Sort, Bubble Sorting, Quick Sort, Merge Sort, radix sort, linear Search-Binary Search

Unit V: Introduction of Stack and Queue

(10)

Introduction of Stack and Queue, Dynamic memory allocation, Linked list-Introduction-Representation of singly Linked List in memory, Traversing a linked list, Searching a linked list, insertion and deletion in linked list, implementation of stack using linked representation, implementation of queue using linked representation

Unit VI: Trees and Terminology

(12)

Trees: Basic terminology, Binary Trees, Binary tree representation, algebraic Expressions, Complete Binary Tree, Array and Linked Representation of Binary trees, Traversing Binary trees, Binary search Tree Implementation ,Operations – Searching, Insertion and deletion in binary search trees., Threaded Binary trees, Traversing Threaded Binary trees.

Text Book:

1. E.Balagurusamy , "Object Oriented Programming with C++" , Tata McGraw Hill Publications.
2. Y.Langsam : "Data Strcture using C and C++ ", Pearson Education Publications
3. Horowitz and Sahani : "Fundamentals of data Structures", Galgotia Publication Pvt. Ltd., New Delhi.
4. A. M. Tenenbaum : "Data Structures using C & C++", PHI Publications.

Reference Books:

1. K.R.Venugopal,B.RajKumar,T.RaviShankar : " Mastering C++" , Tata McGraw Hill publication.
2. W.Savitch : "Problem solving with C++ The OOP", , Pearson education.
3. Herbert Scheldt : " C++, the Complete Reference" Tata McGraw Hill Publications.
4. Robert L. Kruse, Alexander J. Ryba : "Data Structures and Program Design in C++", PHI Publications.
5. Robert Lafore : "Object Oriented Programming in Microsoft C++", Galgotia Publications.

B. E. Fourth Semester

(Electronics / Electronics & Communication/ Electronics & Telecommunication Engg.)

POWER DEVICES AND MACHINES

Duration : 3 Hr.

College Assessment : 20 Marks

University Assessment : 80 Marks

Subject Code : BEENE402T/ BEECE402T/ BEETE402T [4 – 0 – 1 – 5]

Objectives : To teach the basic concepts of power electronics. Also to study the important power devices and machines in detail along with basic applications of SCR as controlled rectifier. To get skill of developing and design related to power electronic circuits.

Outcomes :

After learning this subject, the students will

1. Understand the basics of different components used in Power Electronics.
2. Understand the working and characteristics of different power devices along with their applications in Electronic circuits.
3. Understand the concept of AC-DC converters, Choppers, Inverters which are widely used in industries.
4. Understand the different AC/DC machines and their speed control methods.

Unit I : Thyristors (12)

SCR : Construction, Operation, Transistor analogy, Static & dynamic Characteristics, Switching characteristics, SCR Ratings, Gate characteristics, Triggering requirements, Triggering techniques, Isolation Techniques, Pulse triggering, Burst triggering

TRIAC : Construction, Operation, steady stage characteristics, Triggering modes, Principle of DIAC, Phase control using TRIAC

Unit II : Power Devices (10)

IGBT : Construction, operation, Steady stage characteristics, Switching characteristics, Safe operating area, Need for gate/base drive circuits, Isolation techniques, Base drive circuits for Power BJT

Power MOSFET : Construction, operation, Static characteristics , Switching characteristics , forward and reverse bias operation, Gate drive circuits for Power MOSFET and IGBT.

GTO : Construction, Operation, Turn-off mechanism, Applications.

Unit III : **(10)**

Phase controlled Rectifiers (AC-DC Converters) : Single phase half Wave controlled, full wave controlled rectifiers with R and RL load, Bridge Configurations with R and RL load, Effect of Free-wheeling diode, Three phase full wave and half wave controlled with resistive load.

AC-AC Converters : Basic Principle, Operation , Single phase AC voltage controller for R and RL loads, Working of Three phase AC-AC controller with R Load.

Unit IV : Power Converters **(10)**

DC-DC converters (Chopper) : Working principle of chopper, Types of chopper : Step-Up & Step-Down chopper for RL Load, Class-A, class-B, Class-C, Class-D and Class-E chopper, Control Strategies

DC-AC Converters (Inverter) : Classification of inverter, Working Principle of single phase Half Bridge and Single Phase Full Bridge inverter for R and RL load, Three phase Bridge inverter for Resistive (Star) load.

Unit V : **(10)**

Three Phase Transformers : Construction, Different Connections : Star-Star, Delta-Delta, Star-Delta, Delta-Star, Open Delta Connection, Scott Connection, Parallel operation.

Three Phase Induction Motor : Principle of operation, Necessity of starters , DOL starter, Autotransformer starter, Star-Delta Starter, Speed control techniques of three-phase induction motor.

Unit VI : **(08)**

DC Motors : Principle of Operation, Types of Motor, Speed Control of Shunt Motor : Flux Control, Armature Control and voltage control method, Speed Control of Series : Flux Control, Rheostatic Control method

Universal Motor : Construction, Working ,characteristics and applications.

B.E. Fourth Semester

(Electronics/Electronics & Communication/ Electronics & Telecommunication Engg)

ENVIRONMENTAL STUDIES

Duration : 3 Hr.

College Assessment : Grade

University Assessment : 00 Marks

Subject Code : BEENE406T/ BEECE406T/ BEETE406T **[3 – 0 – 0 – 0]**

Objectives :

The goals of the Environmental Studies subject are to:

1) Increase understanding of how the world as a bio-physical system works, foster awareness of the earth's vital signs, and sharpen the ability of students to understand the nature and results of science.

2) Encourage a critical understanding of the various historical, political, economic, ethical, and religious forces that have shaped and continue to shape our world.

3) Nurture an ecological frame of mind which is willing and able to see things whole and thus resist the narrow specialization that can blind us to the connections between disciplines and bodies of knowledge.

4) Cultivate people who have sufficient knowledge, care, and practical competence to live in an ecologically responsible way.

5) Provide opportunities for students to explore the connections between environmental issues and different religious and philosophical traditions, and to encourage students who are Christian to reflect on their faith and its vision of shalom.

Outcome :

Through the course sequence in ESS, students will be able to:

1. Recognize major concepts in environmental sciences and demonstrate in-depth understanding of the environment.
2. Develop analytical skills, critical thinking, and demonstrate problem-solving skills using scientific techniques.

Unit I : Introduction **(2)**

Definition, Scope and importance, Need for public awareness – institutions in environment, people in environment.

Unit II : Natural Resources **(2)**

Renewable and non-renewable and associated problems; Role of an individual in conservation of natural resources; Equitable use of resources for sustainable lifestyles.

Unit III : Ecosystems **(8)**

Concept of an ecosystem- Understanding ecosystems, ecosystem degradation, resource utilization. **Structure and functions of an ecosystem** – producers, consumers and decomposers.

Energy flow in the ecosystem- water, carbon, oxygen, nitrogen and energy cycles, integration of cycles in nature. **Ecological succession**; food chains, food webs and ecological pyramids; ecosystem types – characteristic features, structure and functions of forest, grassland, desert and aquatic ecosystems.

Unit IV : Bio-diversity
(10)

Introduction – Biodiversity at genetic, species and ecosystem levels
Bio-geographic classification of India
Value of biodiversity – Consumptive use value, productive use value, social, ethical, moral, aesthetic and optional value of biodiversity , Threats to bio-diversity nation; hotspots of biodiversity. **Threats to bio-diversity** – habitat loss, poaching of wildlife, man-wild life conflicts. Common endangered and endemic plant and animal species of India.
Insitu and Exsitu conservation of biodiversity.

Unit V : Pollution **(6)**

Definition; causes, effects and control measures of air, water, soil, marine, noise and thermal pollutions and nuclear hazards. **Solid waste management** – Causes, effects and control measures of urban and industrial waste. Role of individual and institutions in prevention of pollution.

Disaster management – Foods, earthquake, cyclone, landslides

Unit VI : Social Issues and the Environment
(12)

Unsustainable to sustainable development; Urban problems related to energy; water conservation, rainwater, harvesting, watershed management; problems and concerns of resettlement and rehabilitation of affected people.

Environmental ethics – issues and possible solutions – Resource consumption patterns and need for equitable utilization; equity disparity in Western and Eastern countries; Urban and rural equity issues; need for gender equity.

Syllabus.
RTM Nagpur University Nagpur.

BE. Course.

INDUSTRIAL ECONOMICS AND ENTREPRENEURSHIP DEVELOPMENT.
(Common to all branches of Engineering & Technology.)

Examination Scheme:

Units: 06.

Marks: Internal - 20
External - 80

Objective
Study of this subject provides an understanding of the scope of an industrial economics and entrepreneurship development, key areas of business development, sources of finance, project preparation, methods of taxation and tax benefits, significance of entrepreneurship and economic growth, application of engineering skills in entrepreneurial activities etc.

1.
Industrial economics, Types of Business structures, top and bottom line of the organization, economic analysis of business, economics of operations, economic prudence in business.

2.
Market structures- Monopoly, Oligopoly, and Monopolistic competition. Pricing strategies, business integration- forward backward integration, economies of scale, diseconomies of scale, liberalization, privatization and globalization. Business cycles, optimum size of firm.

3.

The functions of central bank and commercial banks, Foreign Direct Investment, Free trade vs. Protectionism, Capital formation, Inflation, Recession and stagnation, Inclusive growth, Public-Private partnership for development, Multiplier effect, Accelerator effect.

4

Entrepreneurship meaning, Major Motives Influencing an Entrepreneur, Factors Affecting Entrepreneurial Growth. Project Formulation, Product development, Market Survey and Research, Demand forecasting techniques,Techno Economic Feasibility Assessment – Preparation of Preliminary Project Reports – Project Appraisal – Sources of Information – Classification of Needs and Agencies.

5.

Need – Sources of Finance, Term Loans, Capital Structure, venture capital. Angel funding, Financial Institution, management of working Capital, Costing, Break Even Analysis, Network Analysis Techniques of PERT/CPM - Taxation – Direct, Indirect Taxes.

6.
Sickness in small Business, Major problems faced by SSIs, Foreign Direct Investments and threat to SSI, Technical consultancy organizations, safeguard measures against variation in currency value, Government Policy for Small Scale Enterprises, tax holidays, and incentives to SSIs.

TEXT BOOKS

Industrial Economics. By, Ranjana Seth, Ane Book Pvt Ltd.

Modern Economic Theory By, K.K. Dewett. S.Chand.

Industrial Economics. By, Jagdish Sheth, Pearson Publication.

"Entrepreneurial Development" By, S.S.Khanka S.Chand & Co. Ltd. Ram Nagar New Delhi, 1999.
Hisrich R D and Peters M P, "Entrepreneurship" 5th Edition Tata McGraw-Hill, 2002.

Management of Entrepreneurship. By, N.V.R. Naidu, I.K. International Pvt Ltd.

Entrepreneurial Development. By, S.Anil Kumar. New Age International.

Small- Scale Industries and Entrepreneurship, By, Dr. Vasant Desai, Himalaya Publication.

REFERENCE BOOKS:

Business Economics. By, K.Rajgopalchar. Atalantic Publishers.

Microeconomics. By, Robert Pindyk

Business Economics. By, H.L. Ahuja,H. L. Ahuja,Louis Prof. De Broglie. S.Chand.

Rabindra N. Kanungo "Entrepreneurship and innovation", Sage Publications, New Delhi, 1998.

Financing Small Scale Industries in India, By, K.C.Reddy.Himalaya Publication.

B. E. Sixth Semester

(Electronics / Electronics & Communication/ Electronics & Telecommunication Engg)

Industrial Visit

Duration: 2 Hrs.
College Assessment: G (Grade)

Subject Code: BEENE607P /BEECE607P/ BEETE607P [0 – 2 – 0 – 2]

Objectives:
To provide industry exposure to students.

Outcome:
The students shall be able to apply this knowledge during their project and may be useful in future.

In industrial visit it is expected that

1. Student should visit the industry.
2. Based on their interaction, experience during this Industrial visit they should prepare technical report with photograph and certificate from industry.

A

Project Report

On

"AUTOMATIC BARCODE BASED BILL CALCULATION USING SMART TROLLEY"

A project report submitted

in

The partial fulfilment of requirement for the award of

Degree of

Bachelor of Engineering

in

Electronics Engineering

Submitted by

Mr. Badal Pradip Armarkar **Mr. Anuj Vinod Agrawal**

Mr. Aman Kashyap

Guided by

Prof.Mrs.K.M.Bogawar

Department of Electronics Engineering

Priyadarshini college of Engineering, Nagpur

(An institute affiliated to Rashtrasant Tukadoji Maharaj Nagpur University, Nagpur)

2017-2018

Priyadarshini college of Engineering, Nagpur

(An institute affiliated to Rashtrasant Tukadoji Maharaj Nagpur University, Nagpur)

Department of Electronics Engineering

CERTIFICATE

This is to certify that this is a bonafide record of project work entitled **"AUTOMATIC BARCODE BASED BILL CALCULATION USING SMART TROLLEY"** carried out by

Mr. Badal Pradip Armarkar

Mr. Anuj Vinod Agrawal

Mr. Aman Kashyap

Student of the B.E., Department of Electronics Engineering, during the academic year 2017-2018, in the partial fulfilment of requirement for the award of the degree of Bachelor of Engineering (Electronics Engineering) offered by the Rashtrasant Tukadoji Maharaj Nagpur University, Nagpur.

Date:

Prof. Mrs. K.M.Bogawar	Dr.S.S.Shriramwar	Dr.M.P.Singh
Guide (EN Dept)	HOD, Electronics Department	Principal,
P.C.E, Nagpur	P.C.E., Nagpur	P.C.E.,Nagpur

Asstt. Prof. Electronics
Priyadarshini College of
Engg., Nagpur

H.O.D. Electronics
Priyadarshini College of
Engg., Nagpur.

6.1 INTRODUCTION

Embedded C is a set of language extension for the C programming language by the C standard committee to adders commonality issues that exist between C extension for different embedded system. Historically, embedded C programming require nonstandard extension to C language in order to support exotic feature such as fixed point arithmetic, multiple distinct memory banks, and basic I/O operations.

Embedded C use most of the syntax and semantics of standard C, e.g., main () function, variable definition, data type declaration, conditional statement (if, switch case), loops (while, for), functions, arrays and strings, structures and union, bit operation.

6.2 EMBEDDED SYSTEM PROGRAMING

Embedded system programming is different from developing application on a desktop computers. Key characteristics of an embedded system, when compared to PCs, are as follows:

Embedded devices have resource constraints (limited ROM, limited RAM, limited stack space, less processing power). Components used in embedded system and PCs are different; embedded system typically uses smaller, less power consuming components. Embedded system are more tied to the hardware.Two salient features of Embedded Programming are code speed and code size. Code speed is governed by the processing power, timing constraints, whereas code size is governed by available program memory and use of programming language. Goal of embedded system programming is to get maximum features in minimum space and minimum time.Embedded system are programmed using different type of languages: Low Level Language i.e., assembly High Level Language like C, C++, Java, Ada etc. Application Level Language like Visual Basic, scripts, Access, etc.Assembly language maps mnemonics words with the binary machine codes that the processor uses to code the instruction. Assembly language seems to be an obvious choice for programming embedded devices. However, use of assembly language is

6.4 COMPILERS FOR EMBEDDED SYSTEM

Perhaps the biggest difference between C compilers for embedded system and C compilers for desktop computer is the distinction between the "platform" and the "target". The platform is where the C compiler runs—perhaps a laptop running Linux or a desktop running windows. The target is where the executable code generated by the C compiler will run the CPU in the embedded system, often without any underlying operating system. The GCC compiler is most popular C compiler for embedded system. GCC was original developed for 32 bit Princeton architecture CPUs. So it was relatively easily ported to target ARM core microcontroller such as Scale and Atmel family; MIPS core microcontroller such as the microchip processors.

6.5 ADVANTAGES OF USING EMBEDDED C

- It is small and reasonably simpler to learn, understand, program and debugging.
- C compiler are available for almost all embedded devices in use today, and there is a large pool of experienced C programmers.
- Unlike assembly, C has advantages of processor-independence and is not specific to any particular microcontroller/microprocessor or any system. This makes it convenient for a user to develop program that can run on most of the system.
- As C combines functionality of assembly language and features of high level languages, C is treated as "middle level computer language" or "high level assembly language".

ABSTRACT

This Project describes the design of a smart, motorized, voice operated wheelchair using embedded system. Proposed design supports voice activation system for physically disabled persons incorporating manual operation. Microcontroller and speaker dependent voice recognition processor have been used to support the navigation of the wheel chair. The direction and velocity of the chair are controlled by pre-defined voice commands. By using speech recognition technique for controlling the wheelchair, we have to speak into the microphone and the microcontroller follows the commands and performs the operations on the Dc motor. This enables patient with limited control over their limbs to navigate using voice commands.